HANDBOOK FOR DESIGN:

SPECIALLY ADAPTED HOUSING

VA Pamphlet 26-13, April 1978
Veterans Benefits Administration
Department of Veterans Affairs
Washington, D.C. 20420

HANDBOOK FOR DESIGN:
SPECIALLY ADAPTED HOUSING

VA Pamphlet 26-13, April 1978
Veterans Benefits Administration
Department of Veterans Affairs
Washington, D.C. 20420

SPECIALLY ADAPTED HOUSING

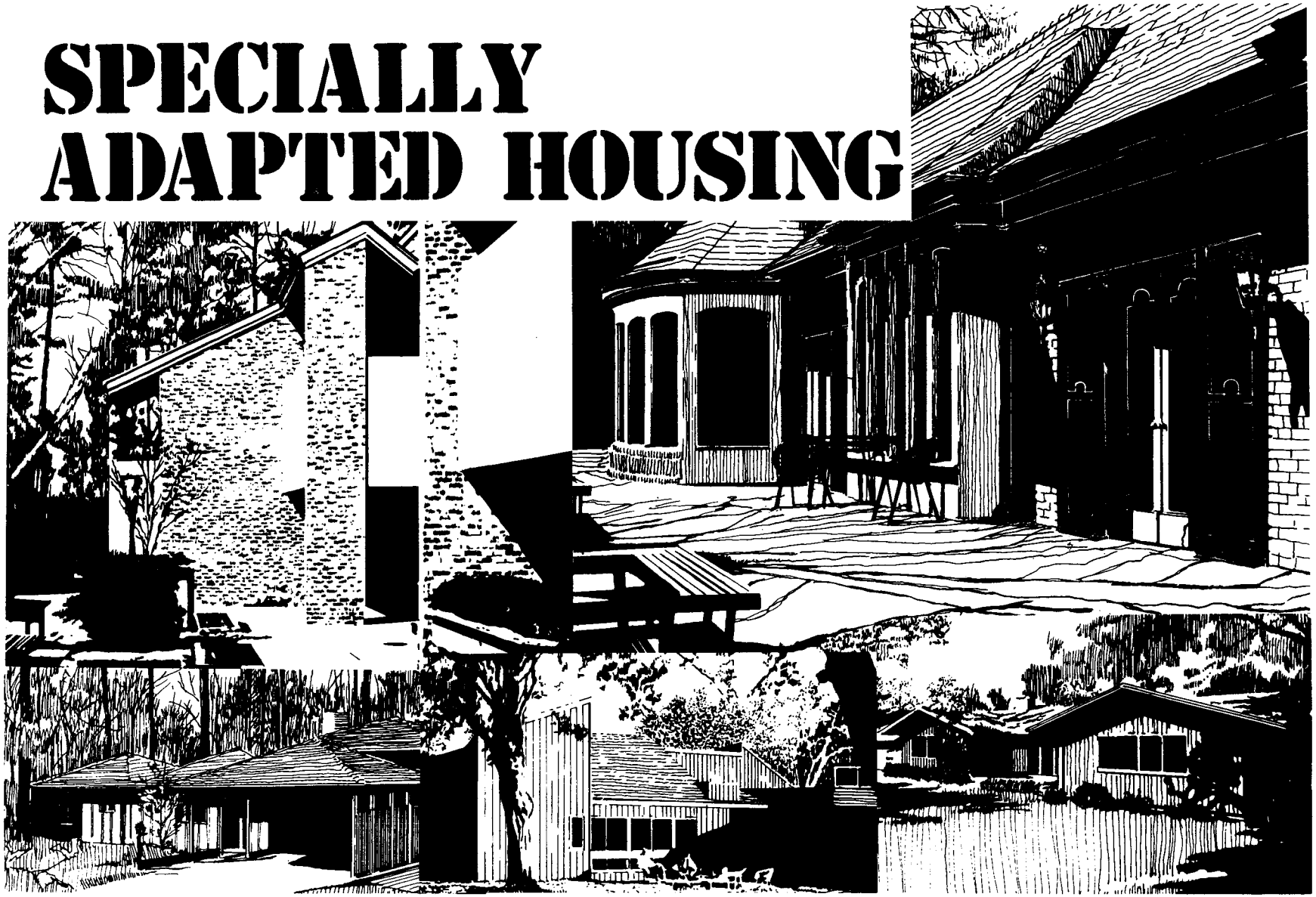

INTENTION

This pamphlet provides assistance to the physically handicapped veteran and the architect/designer in producing the best possible home for the veteran. Due to the wide range of possible designs and the often unique needs of these veterans, it is difficult to formulate precise design requirements. Most criteria presented should therefore be considered only as recommendations. Specific requirements are stated in Veterans Administration Pamphlet 26-69-1, revised. The Veterans Administration hopes that the data presented will increase the architect's or designer's sensitivity to the needs of the veteran and stimulate awareness of the design challenge he or she faces. The majority of the criteria presented is related to specific design details. Though many of these details are critical to function, it is not our intention to unnecessarily restrict the architect's or designer's overall freedom of design. We hope that the final design will not call undue attention to the necessary design features, but will be noteworthy only for its architectural excellence.

USE

This pamphlet is organized to allow quick reference to specific areas of design. We recommend, however, that the designer read the entire pamphlet to become familiar with the total spectrum of the veteran's needs. The pamphlet should then be reviewed with the veteran to determine which recommendations are applicable. All critical dimensions, such as wheelchair size, turning radius, or the individual's reach, must be verified.

RESPONSE

The Veterans Administration encourages response from any source in the form of suggestions, corrections and criticism. Such input will allow continuous updating and improvement of the pamphlet and will contribute to the overall quality of veteran's homes. Acknowledgement will be given for any suggestion adopted for publication. Responses should be directed to the Department of Veterans Benefits (262), Veterans Administration, 810 Vermont Avenue, Washington, D.C. 20420.

ACKNOWLEDGEMENTS

Selected material derived from the following publications which are recommended reading for anyone desiring further study in this area:

1. DESIGNING FOR THE DISABLED, Selwyn Goldsmith, Royal British Institute of Architects, 66 Portland Place, London W1, 1967.
2. AN ILLUSTRATED HANDBOOK OF THE HANDICAPPED SECTION OF THE NORTH CAROLINA BUILDING CODE, Ronald I. Mace, ALA, edited by Betsy Laslett, 1974.
3. BUILDING WITHOUT BARRIERS FOR THE DISABLED, Sara P. Harkness and James W. Groom, Jr., Watson-Guptell Publications, New York, 1976.
4. HOUSING THE HANDICAPPED, Central Mortgage and Housing Corporation, Canada, 1974.

CONTENTS

SECTION 1: INTRODUCTION

1.1 Wheelchair Dimensions 10
1.2 Anthropometrics 12

SECTION 2: SITE CONSIDERATIONS

2.1 Site Considerations 16
2.2 Walks & Ramps 18
2.3 Handrails 20
2.4 Entrances 22
2.5 Garages 24

SECTION 3: FLOOR PLANS

3.1 General Considerations 28
3.2 Bedrooms 30

SECTION 4: INTERIOR DETAILS

4.1 Door Operation 34
4.2 Doors 36
4.3 Windows 38
4.4 Wall Switches 40
4.5 Corridors 42
4.6 Closets 43
4.7 Stairs 44

SECTION 5: BATHROOMS

5.1 Bathroom Arrangements 48
5.2 Bathroom Fixtures 50
5.3 Transfer Sequences 54
5.4 Bathtubs 56
5.5 Showers 58

SECTION 6: KITCHENS

6.1 Kitchen Arrangements 62
6.2 Work Areas 64
6.3 Kitchen Sinks 66
6.4 Ovens 68

SECTION 7: SAFETY CONSIDERATIONS

7.1 Safety Considerations 73

METRIC CONVERSIONS 75

INDEX 77

INTRODUCTION

1.1 WHEELCHAIR DIMENSIONS

THE MAJORITY OF THE DIMENSIONAL DATA PRESENTED IN THIS PAMPHLET IS BASED ON THE NEEDS OF THE WHEELCHAIR USER. MUCH OF THIS DATA IS PREDICATED ON ASSUMED DIMENSIONS OF THE WHEELCHAIR ITSELF. THERE ARE, HOWEVER, NUMEROUS MODELS AND SIZES OF WHEELCHAIRS AVAILABLE. THE DIMENSIONS INDICATED ARE BASED ON THE MOST COMMONLY USED WHEELCHAIR WHICH IS THE COLLAPSIBLE ADULT SIZE CHAIR WITH PROPELLING REAR WHEELS. IT IS IMPORTANT THAT THE DESIGNER VERIFY ALL CRITICAL WHEELCHAIR DIMENSIONS WITH THE INDIVIDUAL VETERAN AND APPLY ANY NECESSARY CORRECTIONS TO THE DIMENSIONS PRESENTED.

1.11 The most commonly used wheelchair is a collapsible model of tubular metal construction with plastic upholstery for the back and seat. The width of the wheelchair itself is adjustable and is usually set to suit the individual. The seat height varies slightly and may be altered by the addition of a cushion. The footrests may be fixed or adjustable. Many footrests are hinged to swing to the side, allowing the user to approach furniture or fixtures more closely. The armrests on many wheelchairs are removable. This feature is necessary to accommodate side or parallel transfer (see Fig. 5.33). Most wheelchairs collapse to a width of approximately 11" to allow convenient storage or transfer to a car. Attachments such as electric motors or commodes will affect the overall wheelchair dimensions significantly.

1.12 The turning radius of a wheelchair varies with the width and length of the chair and the technique employed by the user. The most common method for turning is accomplished by simultaneously moving one rear wheel forward and the other rear wheel backward. This results in the wheelchair pivoting about its center. When operated in this manner, the average wheelchair requires a turning space with a diameter of approximately 5'-0". The wheelchair can be turned in a smaller space by a constant series of backing and turning. An alternate method of turning is accomplished by locking one rear wheel and turning the other. This increases the diameter of the turning space to approximately 6'-0". In computing turning space requirements, the designer should keep in mind the vertical characteristics of the wheelchair. For example, the height of the footrest (to the top of the foot) is approximately 9" and therefore the footrest and feet can pass under fixtures such as lavatories as the wheelchair rotates.

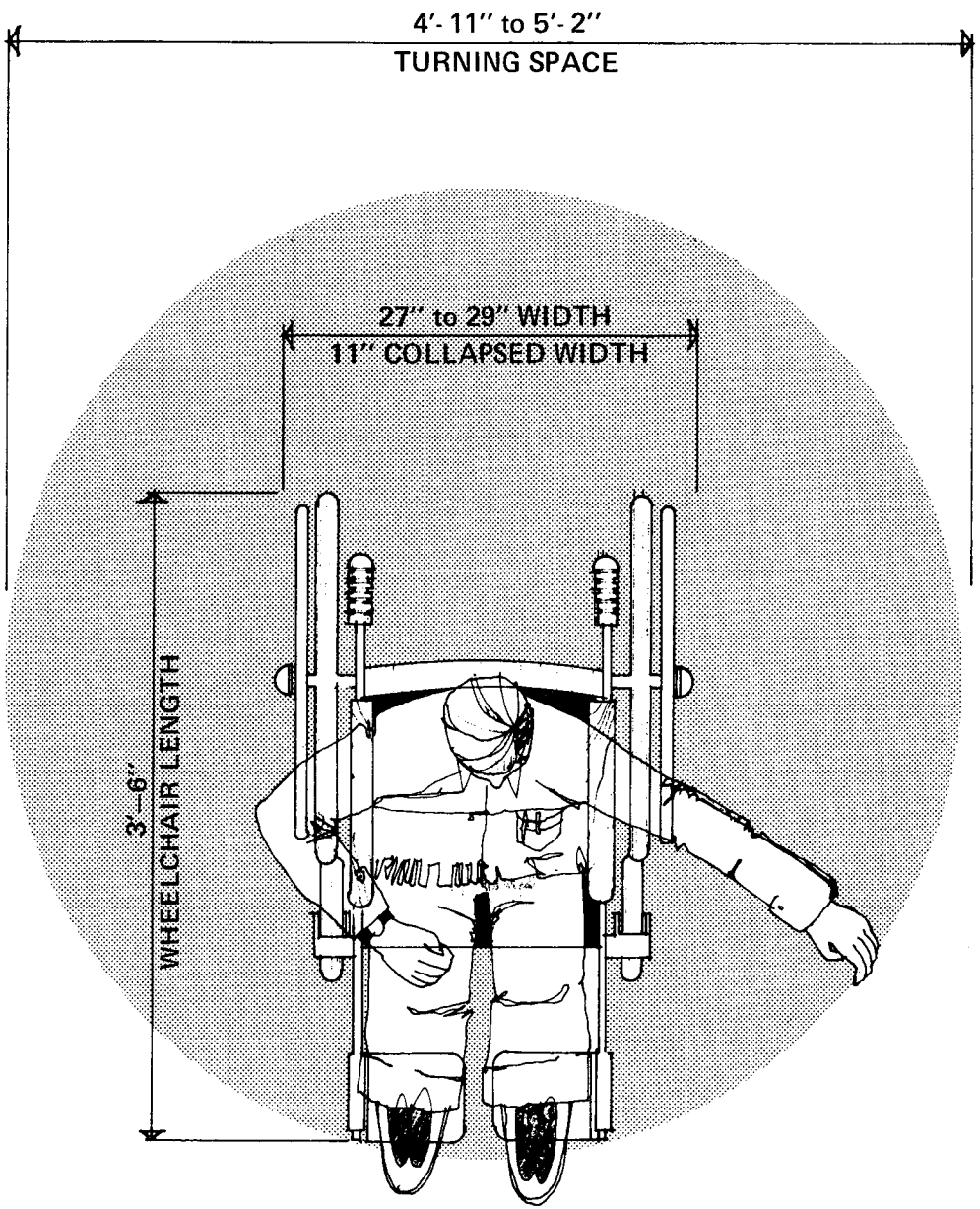

FIG. 1.1 WHEELCHAIR DIMENSIONS

TYPICAL DIMENSIONS

WIDTH	27" to 29"
LENGTH	3'- 6"
TURNING SPACE	4'- 11" to 5'- 2"

ACTUAL DIMENSIONS

WIDTH	_____
LENGTH	_____
TURNING SPACE	_____

1.2 ANTHROPOMETRICS

THE DIMENSIONAL DATA PRESENTED IN FIGS. 1.21 AND 1.22 ARE APPROPRIATE FOR THE AVERAGE ADULT MALE WHEELCHAIR USER. SIGNIFICANT VARIATIONS ARE POSSIBLE AS A RESULT OF WHEELCHAIR DIMENSIONS AND THE USER'S ANTHROPOMETRIC CHARACTERISTICS. *THE DESIGNER MUST VERIFY ALL DIMENSIONS AND MAKE ANY ADJUSTMENTS APPROPRIATE.* DIMENSIONS RELATING TO RANGE OF COMFORTABLE REACH ARE BASED ON THE INDIVIDUAL'S CAPABILITIES WHILE SITTING ERECT. MOST INDIVIDUALS' EFFECTIVE REACH IS CONSIDERABLY GREATER WHEN HE OR SHE LEANS FORWARD FROM THE WAIST.

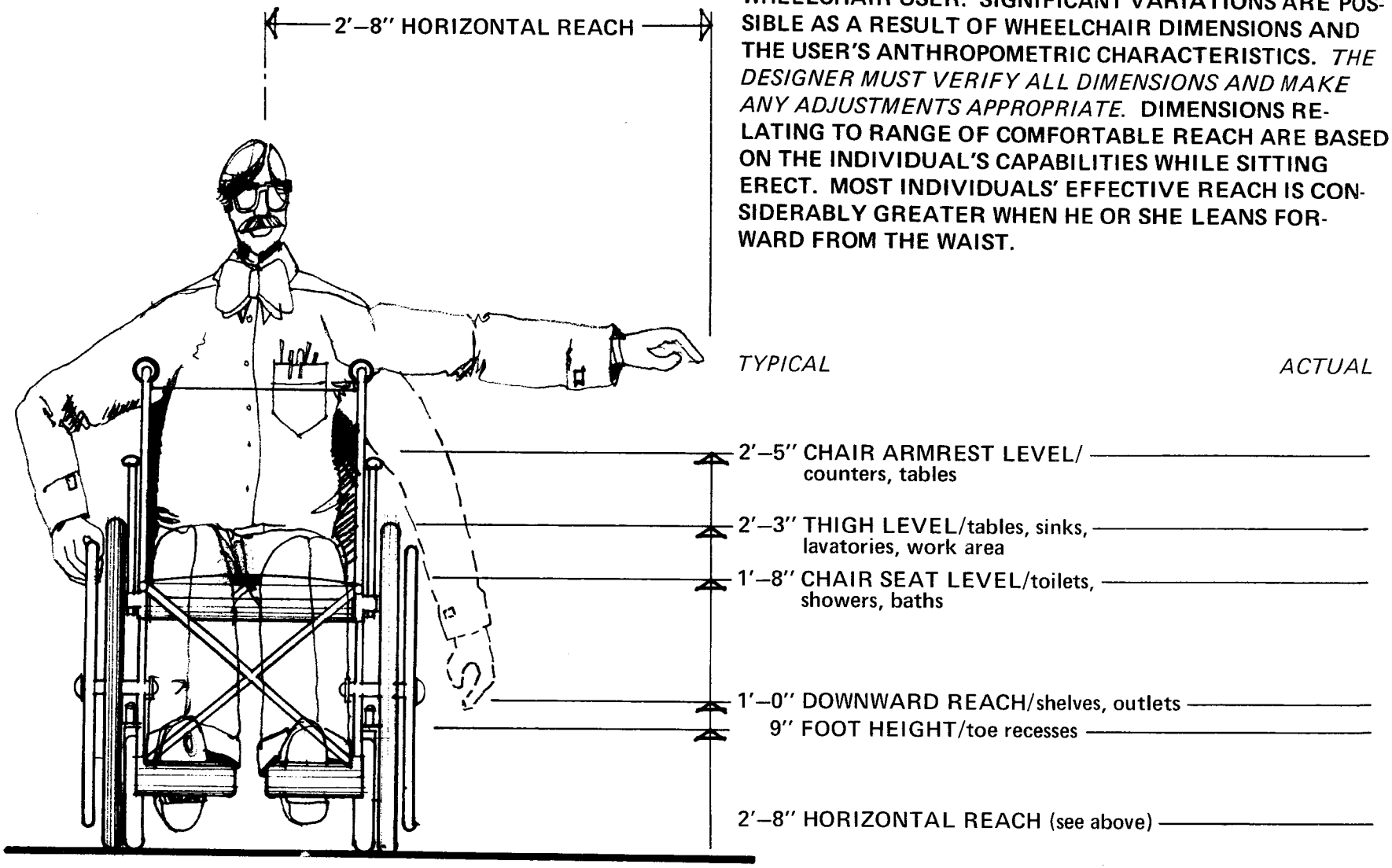

FIG. 1.21 TYPICAL DIMENSIONS

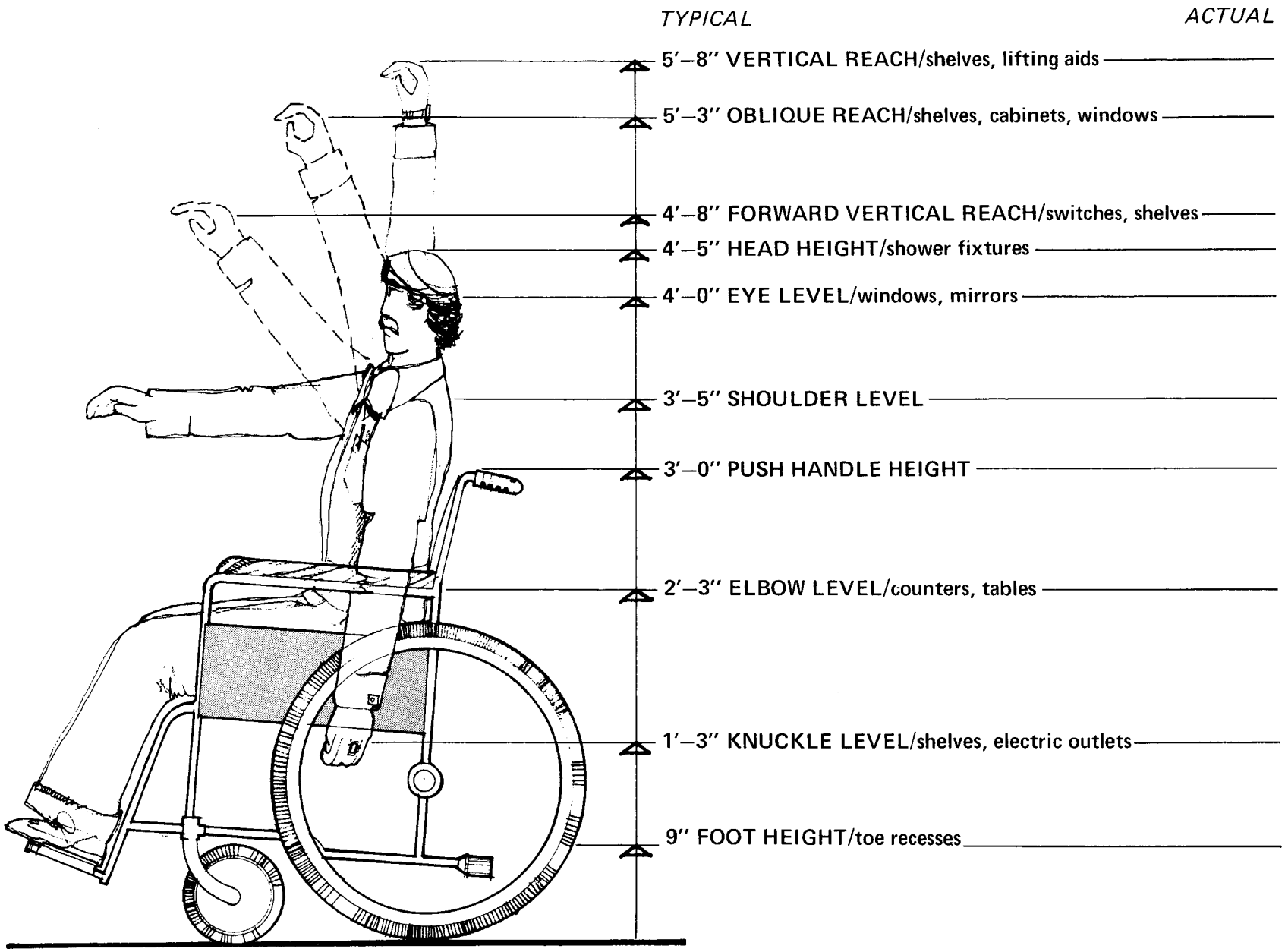

FIG. 1.22 TYPICAL DIMENSIONS

SITE CONSIDERATIONS

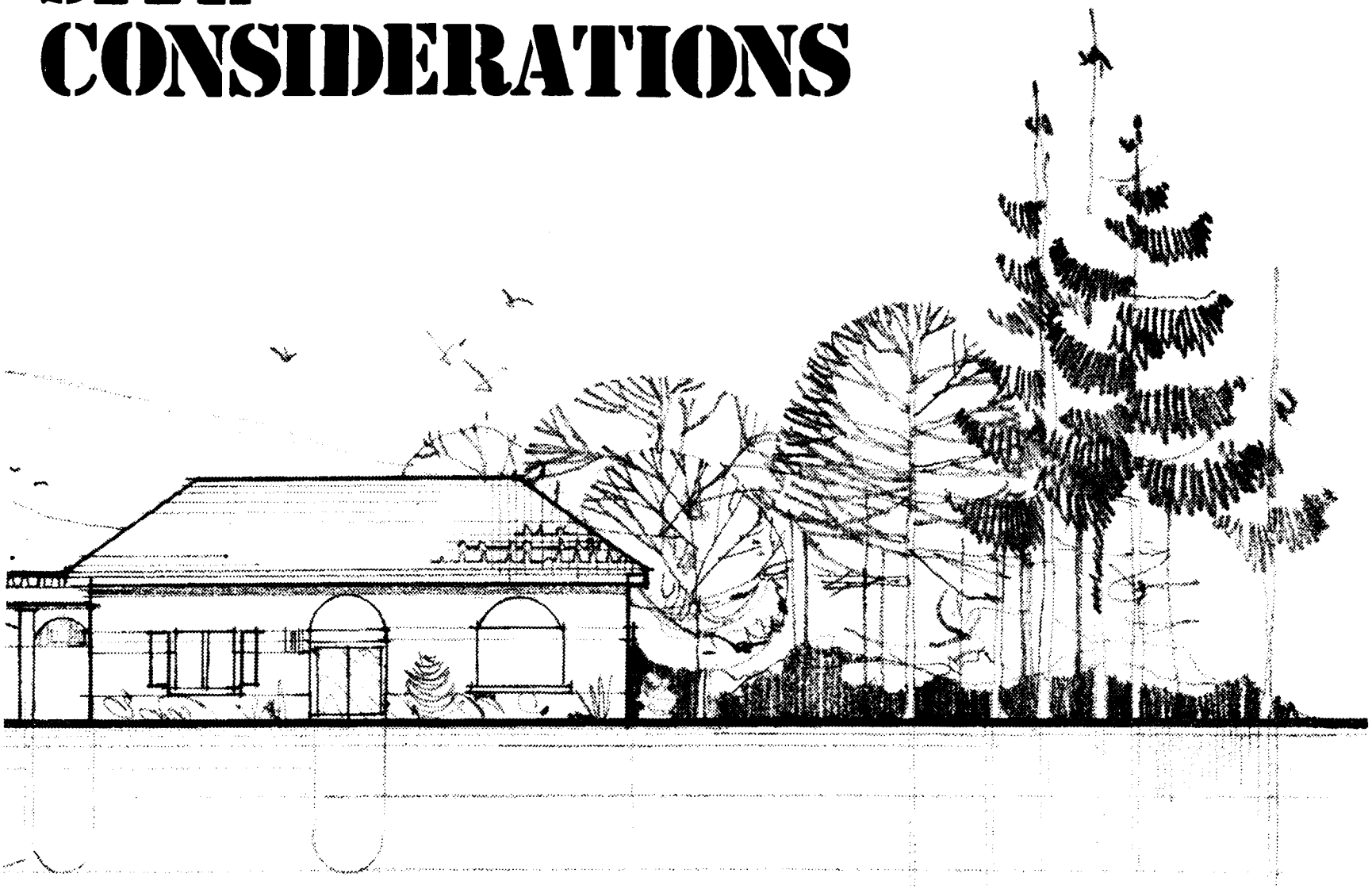

2.1 SITE CONSIDERATIONS

THE SELECTION OF A SUITABLE SITE IS IMPORTANT TO THE SUCCESS OF A SPECIALLY ADAPTED HOME. IT IS NOT NECESSARY THAT THE SITE BE PERFECTLY LEVEL. THE SITE SHOULD, HOWEVER, ACCOMMODATE A SINGLE-STORY HOME (SEE GENERAL CONSIDERATIONS, 3.1) WITH ACCESS FROM THE STREET OR DRIVEWAY WITHOUT REQUIRING EXTENSIVE RAMPS OR STAIRS.

2.11 A sloped site may often be adapted by careful design and regrading to match the elevation of the driveway and the residence. A walk or ramp must connect the driveway and the front door. The portion of the driveway adjoining this walk must be level and of adequate width and length to allow maneuvering room around the car (see Garages, 2.5). The private automobile is important for the independence of the wheelchair user. Garage or parking facilities must be provided in conjunction with any type of residence.

2.12 Since wheelchairs must be operated on relatively level hard surfaces, it is important that outdoor spaces such as patios, decks or gardens be properly developed. For example, flower beds in raised planters may be provided for the wheelchair user with an interest in gardening. Patios or decks should be appropriately sheltered from wind and sun, and adequate lighting should be provided to allow nighttime use of such areas. Paved, hard-surfaced walks should be provided between all appropriate points (see Walks & Ramps, 2.2).

SITE CONSIDERATIONS

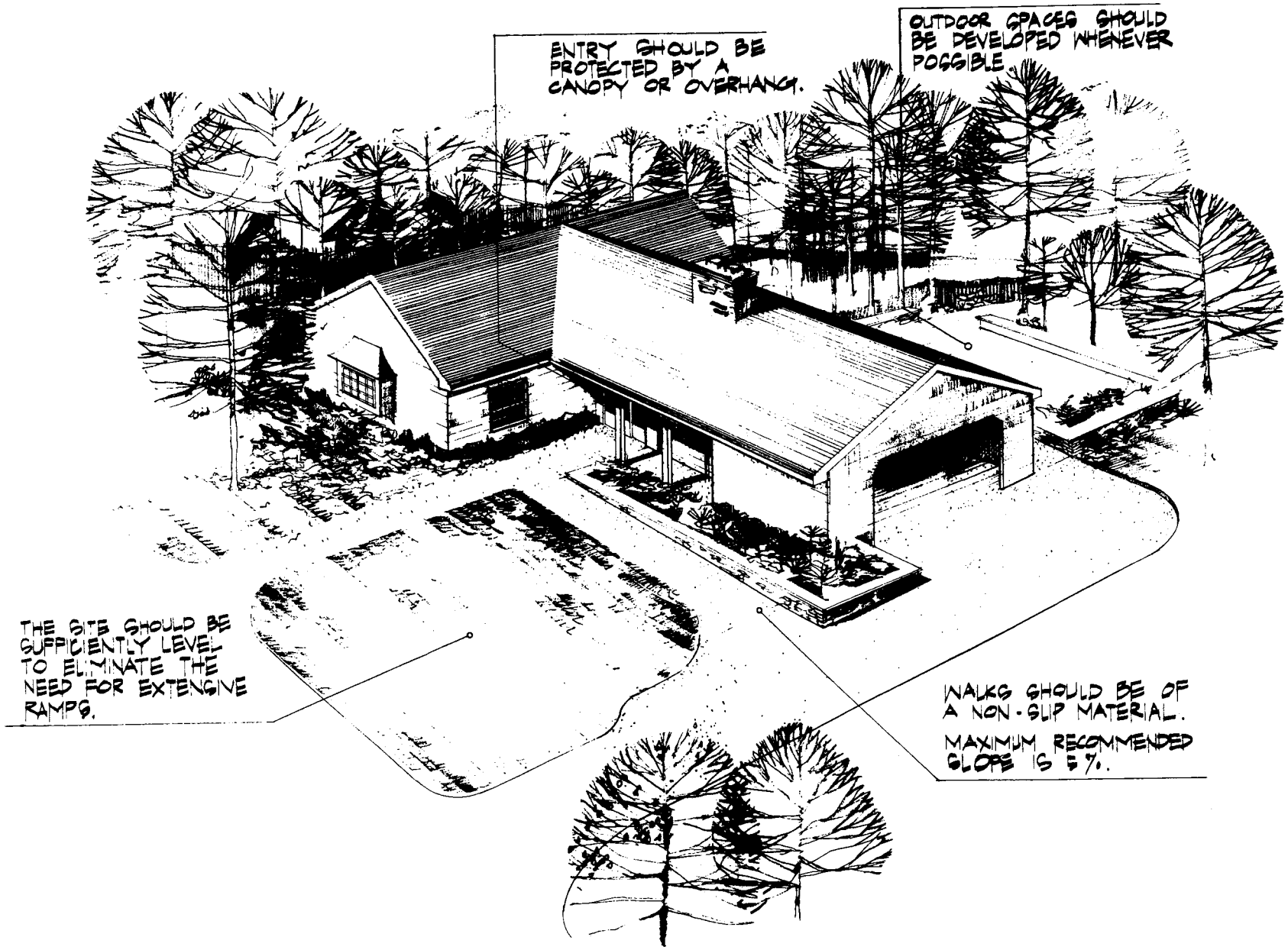

FIG. 2.11 SITE CONSIDERATIONS

291-128 0 - 91 - 2

2.2 WALKS and RAMPS

THE SPECIALLY ADAPTED HOME SHOULD BE SITED TO MINIMIZE THE NECESSITY FOR EXTENSIVE RAMPS OR STAIRS. AMBULANT INDIVIDUALS OFTEN PREFER STAIRS TO RAMPS. FOR THE WHEELCHAIR USER, RAMPS OR SLOPED WALKS MUST BE PROVIDED TO ACCOMMODATE ANY LEVEL CHANGE. THE WHEELCHAIR USER CAN USUALLY NEGOTIATE RAMPS OR WALKS WITH A SLOPE OF 8%. IF THE SLOPE EXCEEDS 5%, HOWEVER, IT MAY BE NECESSARY FOR THE INDIVIDUAL TO PROPEL HIMSELF OR HERSELF BY MEANS OF HANDRAILS ON BOTH SIDES. REGARDLESS OF SLOPE, RAMPS MAY REQUIRE HANDRAILS FOR SAFETY (SEE HANDRAILS, 2.3). WALKS (WHERE SURFACE IS LEVEL WITH GRADE) DO NOT REQUIRE HANDRAILS IF SLOPE DOES NOT EXCEED 5%.

2.21 Walks or ramps must be a minimum of 3'-6" wide. A width of 5'-0" is preferred for walks to accommodate the wheelchair turning radius.

2.22 Walks or ramps must be of a nonslip material and yet, the finish should not be so rough as to make wheelchair travel difficult or unpleasant. The number and size of expansion joints should be minimized.

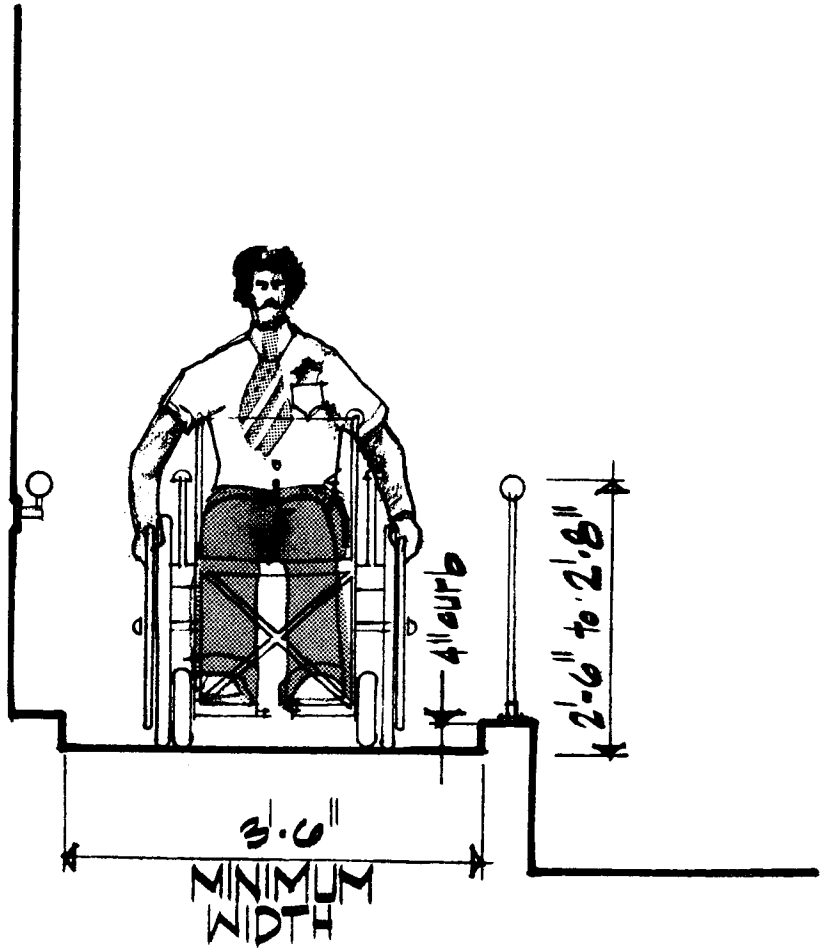

FIG. 2.21 RAMP WIDTHS

2.23 For long, continuously sloped walks or ramps, a level rest platform should be provided every 30'-0". This platform should be a minimum of 5'-0" by 5'-0". A similar level platform should also be provided at any point where a sloped walk or ramp changes direction. A level area 5'-0" in length should precede any sloped walk or ramp.

2.24 For walks or ramps with a slope between 5% and 8%, the recommended width is 3'-6" with handrails on both sides This width will allow the simultaneous use of both handrails. Ramps must not exceed 8% slope.

2.25 Ramps typically constitute a means of emergency exit and therefore must be of fire-retardant construction.

2.26 Where ramps are exposed to inclement weather, a canopy should be provided for protection. In cold climates, built-in electric heating coils are often installed.

2.27 A low curb (approximately 4" high) on one or both sides of a ramp or walk will serve as a guardrail for wheelchair and prevent the user from scraping his or her knuckles on a parallel wall.

2.28 Where stairs are provided, all risers should be slanted or beveled. Open risers or risers with protrusions or overhanging nosings are unacceptable. An individual wearing leg braces can trip on stairs of this type because he or she cannot manipulate the toe to clear the nosing.

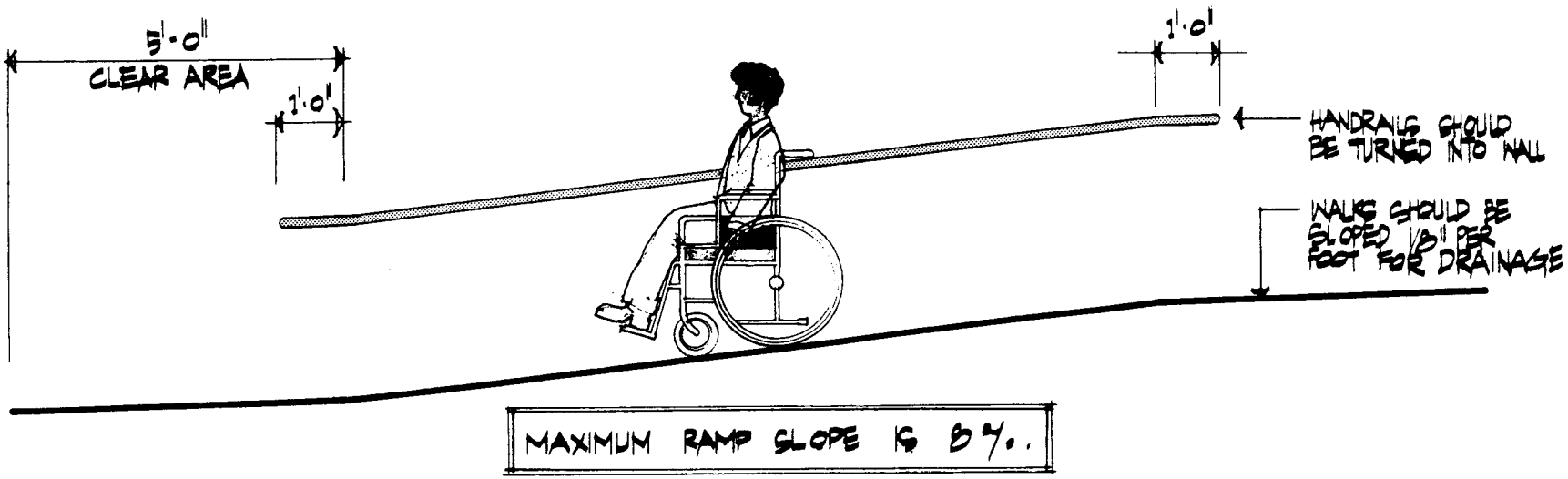

FIG. 2.22 RAMPS

2.3 HANDRAILS

HANDRAILS SERVE THREE PRIMARY FUNCTIONS: *(1) TO ACT AS A SAFETY BARRIER TO PROTECT THE USER FROM A FALL, (2) AS AN AID TO BALANCE, AND (3) AS A MEANS OF PROPULSION FOR THE WHEELCHAIR USER.* **THE LOCATION, HEIGHT AND SHAPE OF ANY HANDRAIL IS THEREFORE IMPORTANT. HANDRAILS SHOULD BE LOCATED AT ALL STAIRS AND AT ANY RAMP OR PLATFORM OF SUFFICIENT HEIGHT TO POSE A POTENTIAL DANGER TO THE USER. MANY INDIVIDUALS PREFER RELATIVELY NARROW STAIRS WHICH ALLOW SIMULTANEOUS USE OF HANDRAILS ON EACH SIDE. HANDRAILS SHOULD ALSO BE PROVIDED ON BOTH SIDES OF ANY RAMP WITH A SLOPE GREATER THAN 5%. (SEE WALKS & RAMPS, 2.2).**

2.31 A handrail with a 1-1/2" diameter provides the user the most satisfactory grip. Where a larger handrail is desired, a similar shape can be achieved by grooves cut in the larger section (see Fig. 2.31).

2.32 Handrails should be mounted to provide 1-1/2" clearance from the adjacent wall. A larger clearance will allow the arm to become wedged between the wall and the handrail. To prevent scraped knuckles, the wall surface behind a handrail should not be rough or highly textured.

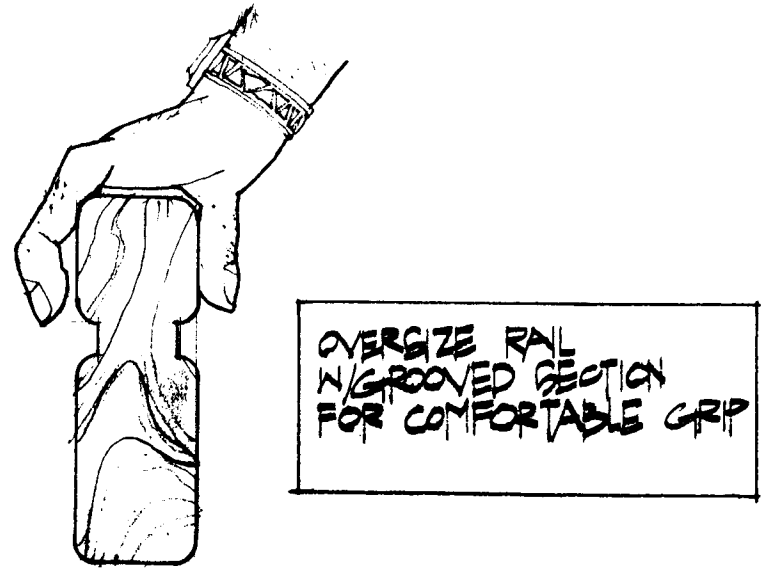

FIG. 2.31 HANDRAIL GRIPS

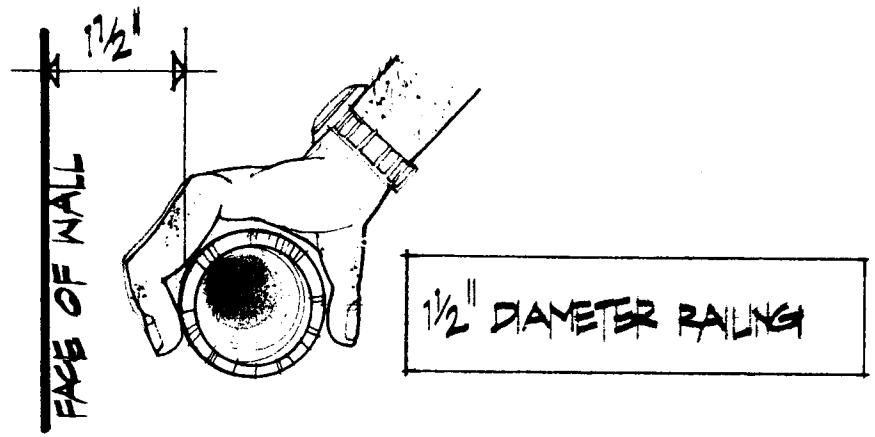

FIG. 2.32 HANDRAIL GRIPS

2.33 Handrails should be smooth and continuous and uninterrupted in the vertical or horizontal plane. Handrails should continue a minimum of 1'-0" beyond both ends of any stair or ramp. This is especially important for the wheelchair user, who must be able to pull the chair ahead until he or she is on level ground.

2.34 To avoid dangerous projections, the ends of all handrails should be turned down or turned into the parallel wall.

2.35 Handrails should be provided on both sides of stairs at a height of approximately 2'-9". Handrails at ramps should be mounted at a height between 2'-6" and 2'-8".

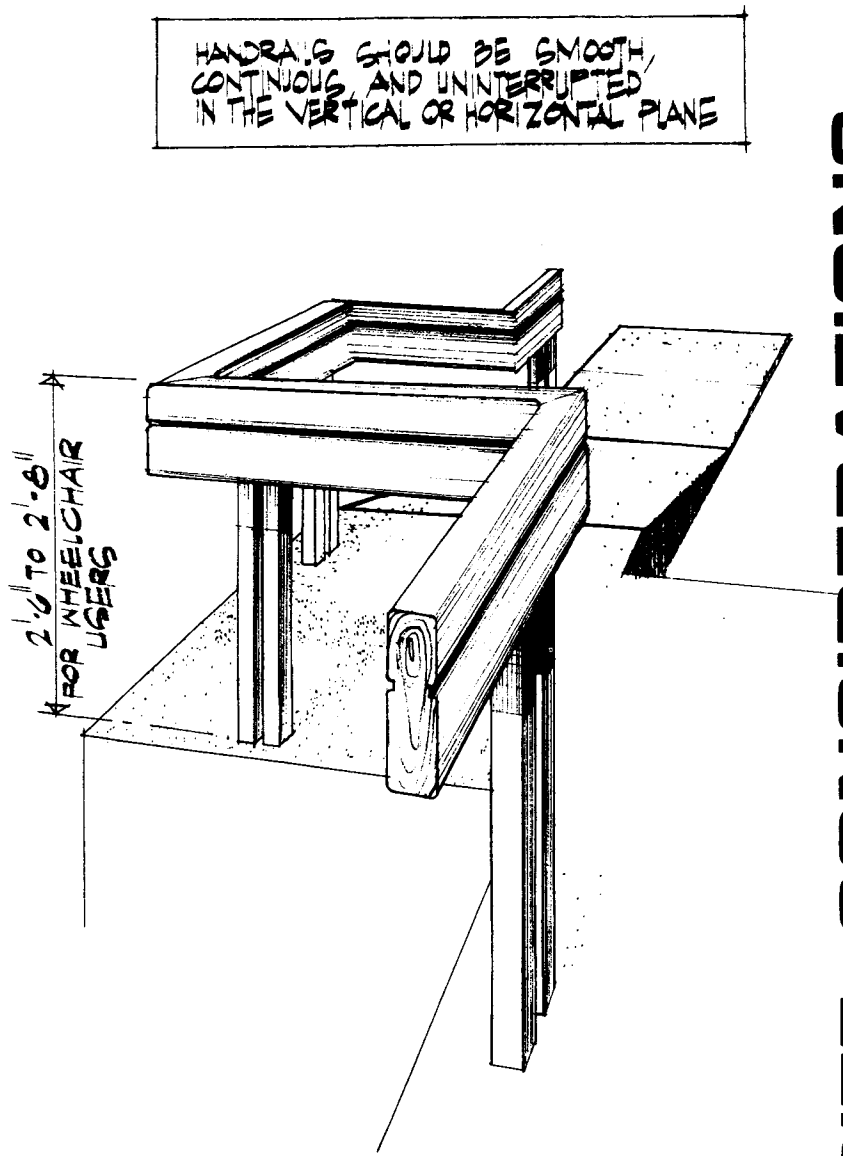

FIG. 2.33 HANDRAILS

2.4 ENTRANCES

A LEVEL PLATFORM MUST BE PROVIDED AT THE ENTRANCE TO ANY RESIDENCE. THIS PLATFORM MUST BE LARGE ENOUGH TO ACCOMMODATE WHEELCHAIR MANEUVERING. THE PLATFORM SHOULD BE UNOBSTRUCTED BY DOOR MATS OR DRAINAGE GRATES. DOOR LOCKS SHOULD BE AT A CONVENIENT HEIGHT AND EASY TO OPERATE. THE FRONT DOOR SHOULD BE WELL-INSULATED AND OPEN WITH EASY OPERATION. STORM AND SCREEN DOORS SHOULD BE AVOIDED SINCE TWO CONSECUTIVE DOORS ARE EXTREMELY CUMBERSOME TO OPERATE. THE DOOR AND FRAME SHOULD HAVE ADEQUATE WEATHERSTRIPPING TO PREVENT DRAFTS. SIDELIGHTS ARE OFTEN INCORPORATED AT THE FRONT DOOR TO ALLOW THE WHEELCHAIR USER TO PREVIEW VISITORS.

2.41 A level platform must be provided at any entrance. For the wheelchair user, this platform should have a minimum size of 5'-0" by 5'-0". The platform should include a clear area 1'-6" in width beside the door on the side opposite the hinges (See DOOR OPERATION, 4.1). The platform may be sloped 1/8" per foot to provide drainage.

2.42 The entrance platform should be protected from inclement weather by a canopy or overhang. The platform surface must be of a nonslip material.

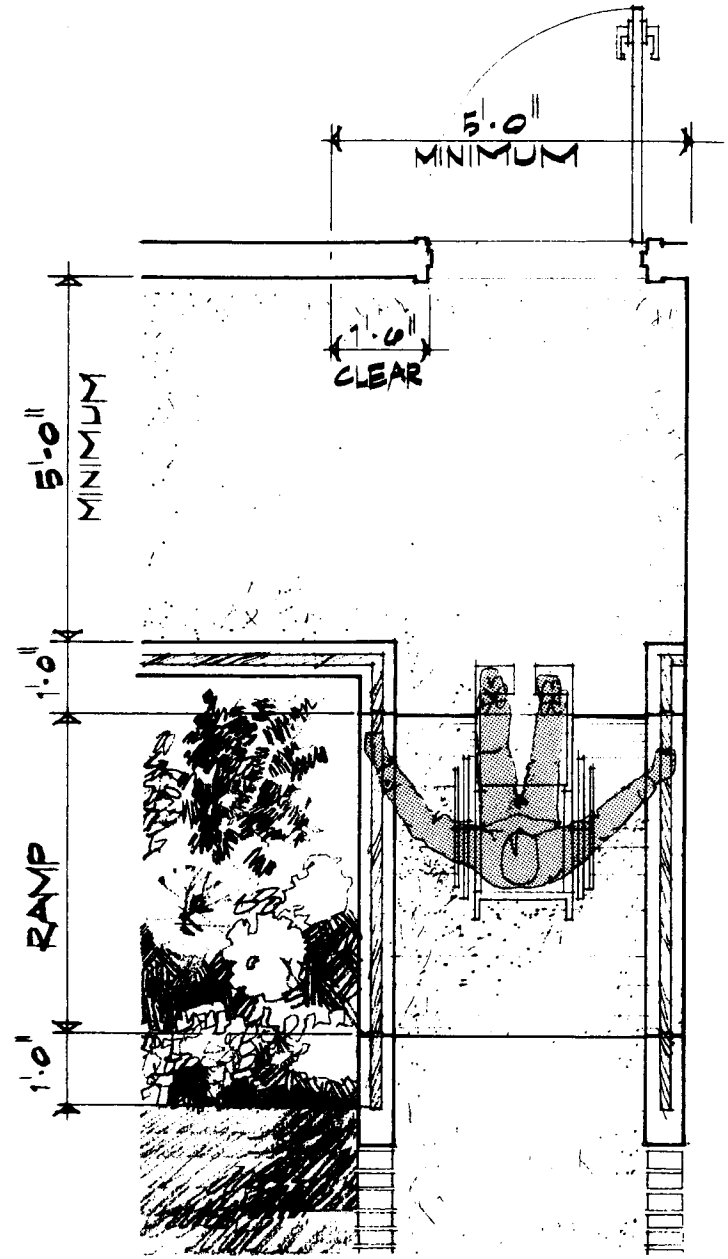

FIG. 2.41 MINIMUM ENTRANCE REQUIREMENTS

2.43 For the wheelchair user, the threshold at the front door should have a maximum height of 1/2". Any vertical obstruction with a height greater than 1/2" will "trip" the small front wheels of the wheelchair. Weatherstripping at the front door sill should be provided by means of a neoprene sweep strip.

2.44 Doorbells and mailboxes should be mounted at a convenient height (3'-0" to 3'-9").

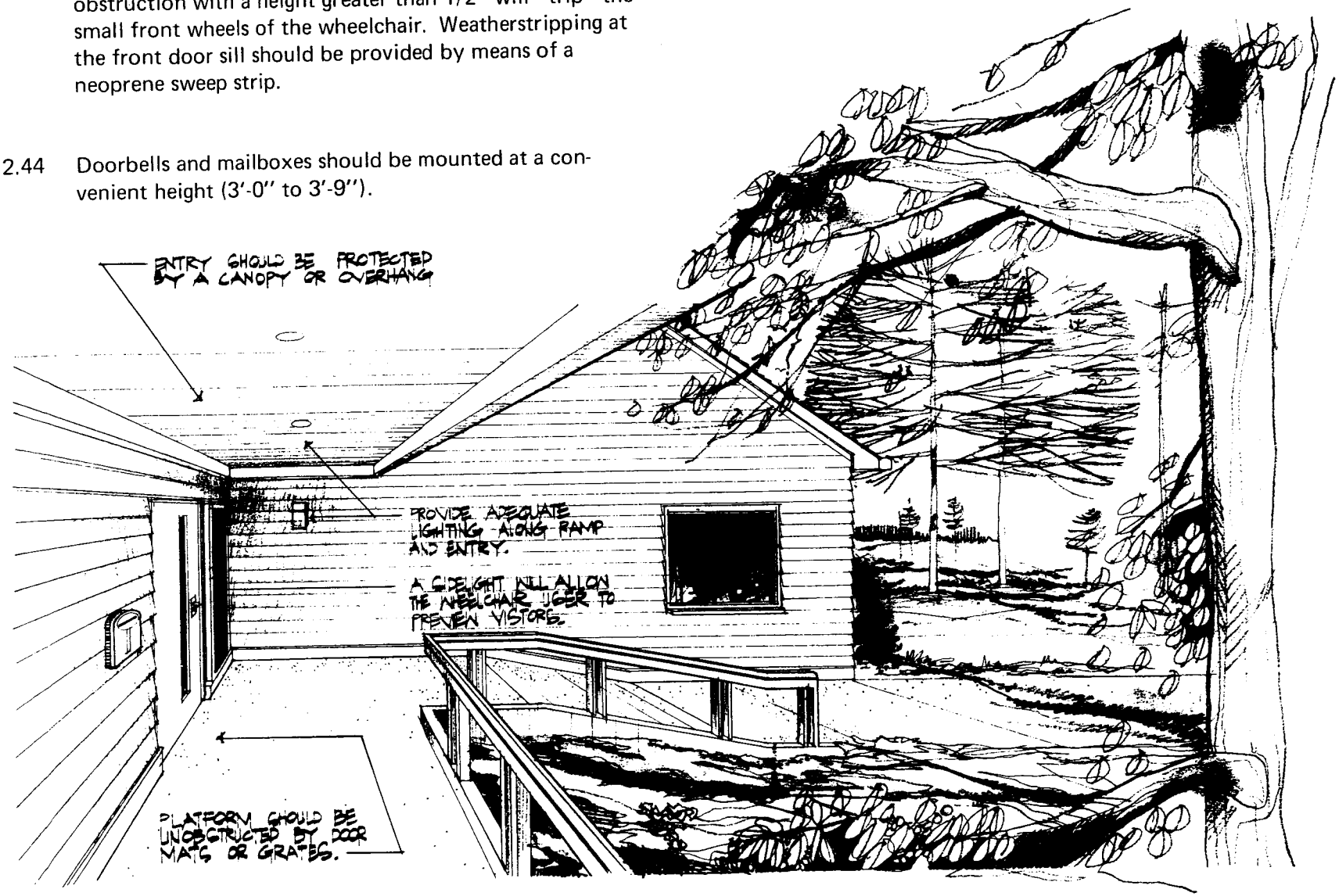

FIG. 2.42 ENTRANCES

2.5 GARAGES

A GARAGE OR PARKING SPACE SHOULD BE PROVIDED IN CONJUNCTION WITH ANY RESIDENCE. THE TRAVEL DISTANCE BETWEEN THE GARAGE OR PARKING SPACE AND THE RESIDENCE SHOULD BE MINIMIZED AND, WHENEVER POSSIBLE, THE ROUTE SHOULD BE PROTECTED AGAINST INCLEMENT WEATHER. ANY GARAGE, CARPORT, OR PARKING SPACE MUST BE LARGE ENOUGH TO ALLOW ADEQUATE MANEUVERING ROOM AROUND THE CAR. THE GARAGE MUST PROVIDE A CLEAR AREA WITH A MINIMUM WIDTH OF 5'-0" BESIDE THE CAR. THIS WILL ALLOW THE WHEELCHAIR USER TO OPEN THE CAR DOOR AND MANEUVER THE WHEELCHAIR FOR TRANSFER TO THE SEAT. SWITCHES FOR LIGHTS OR AUTOMATIC GARAGE DOORS SHOULD BE CONVENIENTLY LOCATED AND EASILY ACCESSIBLE TO THE USER.

2.51 Parking spaces should have a minimum width of 13'-6".

2.52 Garages or carports must allow a clear area with a minimum width of 5'-0" on at least one side of the car. To accommodate this area, a single-car garage should have a minimum width of 14'-6". A passageway 4'-0" wide should be provided in front of or behind the automobile. A garage or carport should therefore have a minimum length of 24'-0".

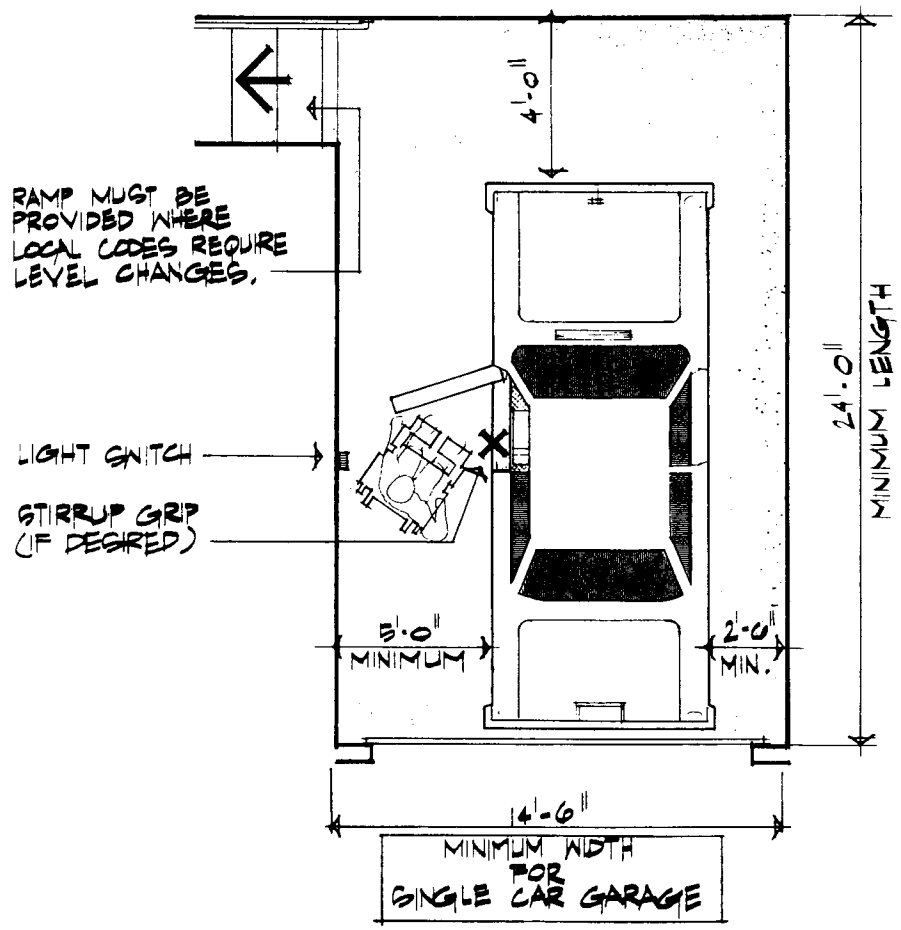

FIG. 2.51 GARAGE OR CARPORT

2.53 A covered passageway with adequate overhang for protection against inclement weather should be provided when the garage is detached from the residence.

2.54 Automatically operated garage doors are a great convenience and should be incorporated whenever possible.

2.55 Garage light switches must be carefully located. It is recommended that one switch be accessible from within the car or immediately after exiting the car. Ideally, a second switch should be located in the house. The most satisfactory arrangement is a garage light which operates in conjunction with automatic garage doors.

2.56 A suspended stirrup grip or hoist may be provided to facilitate transfer to and from the car.

2.57 When a level change between the residence and the garage is required by local code, a ramp must be provided (See WALKS & RAMPS, 2.2).

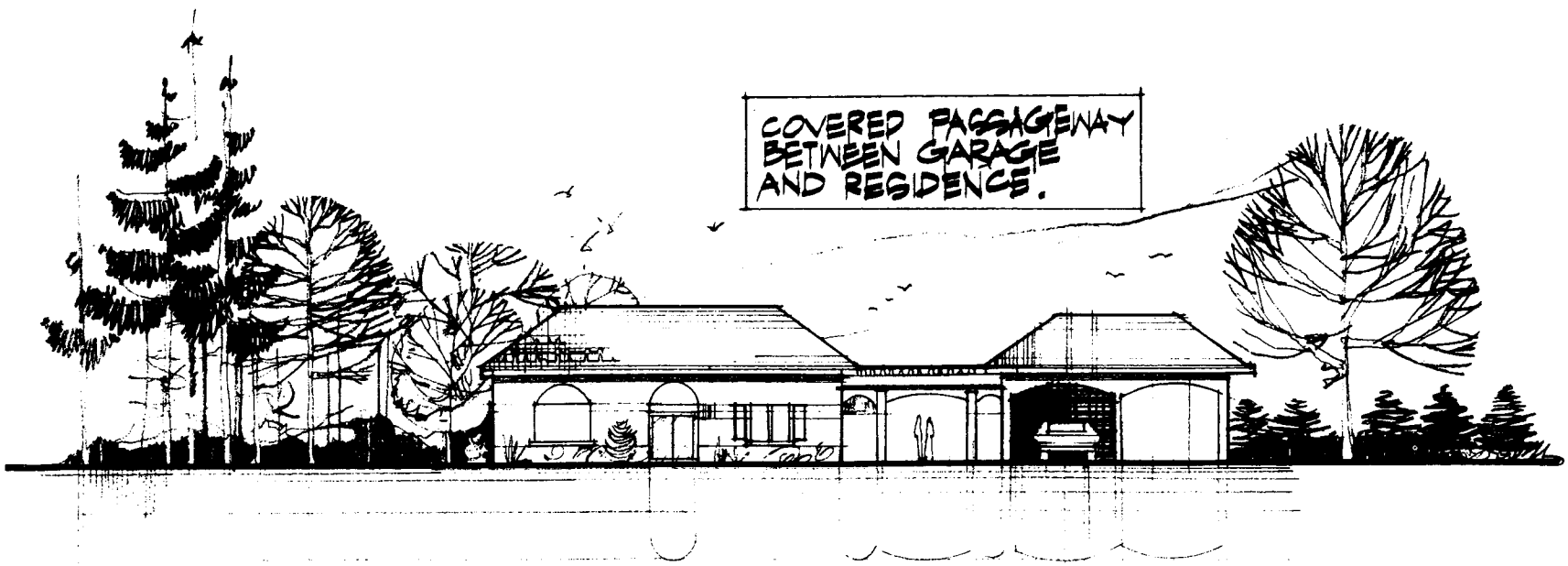

FIG. 2.52 DETACHED GARAGE

FLOOR PLANS

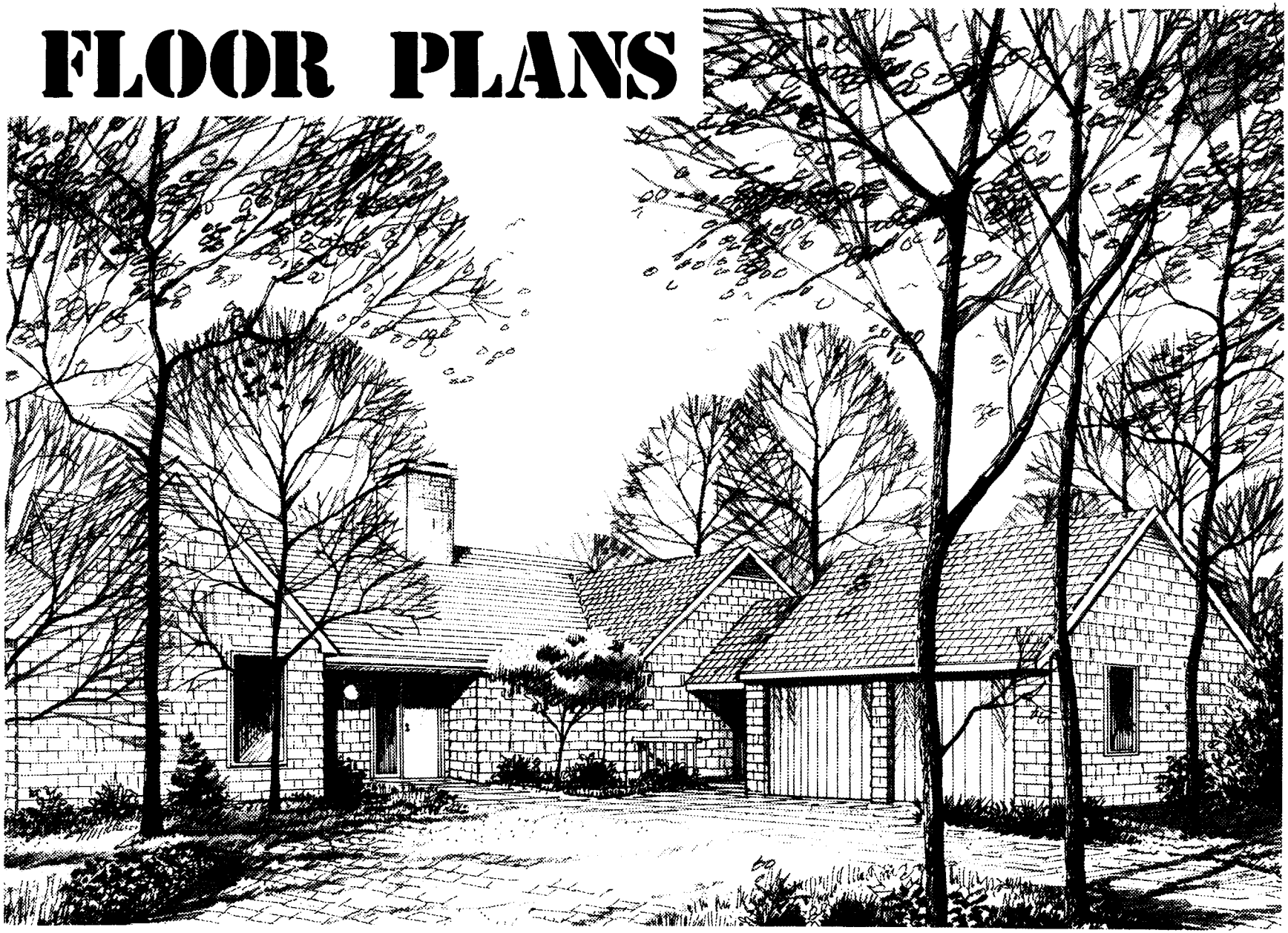

3.1 GENERAL CONSIDERATIONS

THERE ARE MANY TYPES OF SPECIALLY ADAPTED HOUSING. THE HOME MAY BE A DETACHED RESIDENCE, A TOWNHOUSE, OR AN APARTMENT. IT MAY BE CUSTOM-BUILT NEW CONSTRUCTION OR THE MODIFICATION OF AN EXISTING RESIDENCE. EACH HOME WILL REQUIRE A DIFFERENT DEGREE OF SPECIALIZED DESIGN. THE MOST IMPORTANT CRITERIA IS THAT THE HOME ACCOMMODATE THE PARTICULAR NEEDS AND DESIRES OF THE INDIVIDUAL VETERAN. THE FLOOR PLANS ILLUSTRATED ARE SCHEMATIC ARRANGEMENTS OF TYPICAL SINGLE-FAMILY HOMES. THESE PLANS ARE PRESENTED ONLY TO INDICATE GENERAL AREAS REQUIRING DESIGN ATTENTION AND ONE POSSIBLE SOLUTION. SPECIFIC REQUIREMENTS OF INDIVIDUAL SPACES ARE DETAILED ELSEWHERE IN THIS PAMPHLET. THE FOLLOWING FEATURES SHOULD BE CONSIDERED FOR MOST ADAPTED HOUSING:

3.11 It is recommended that specially adapted homes be single-story designs. For the wheelchair user, it is mandatory that all essential facilities be located on one level. Where level changes between rooms cannot be avoided, ramps must be provided. (See WALKS & RAMPS, 2.2). Individual rooms should be generous in size to provide increased circulation space. Unnecessary doors or partitions should be omitted to allow maximum freedom of movement.

3.12 Interior finishes should be carefully selected for ease of cleaning and maintenance. Special consideration should be given to floor finishes. Bathroom and shower floors must be of a nonslip material. Lowpile, high density carpet may be installed in any appropriate location. In addition to its aesthetic qualities, carpet greatly reduces sound transmission and serves to cushion accidental falls. Loose weave or shag rugs, however, make travel difficult for ambulants and wheelchair users. If carpet pads are necessary, the pads should be thin and firm. All carpets must be well-fitted and properly secured to the floor.

3.13 Many individuals are especially vulnerable to cold and drafts. It is therefore important that the residence be well-insulated and adequately weatherstripped at all doors and windows. In some instances, it may be desirable to provide zone-controlled heating to allow the user independent temperature control for the master bedroom and bath. Bathroom heat may be further supplemented by a radiant heat lamp.

FLOOR PLANS

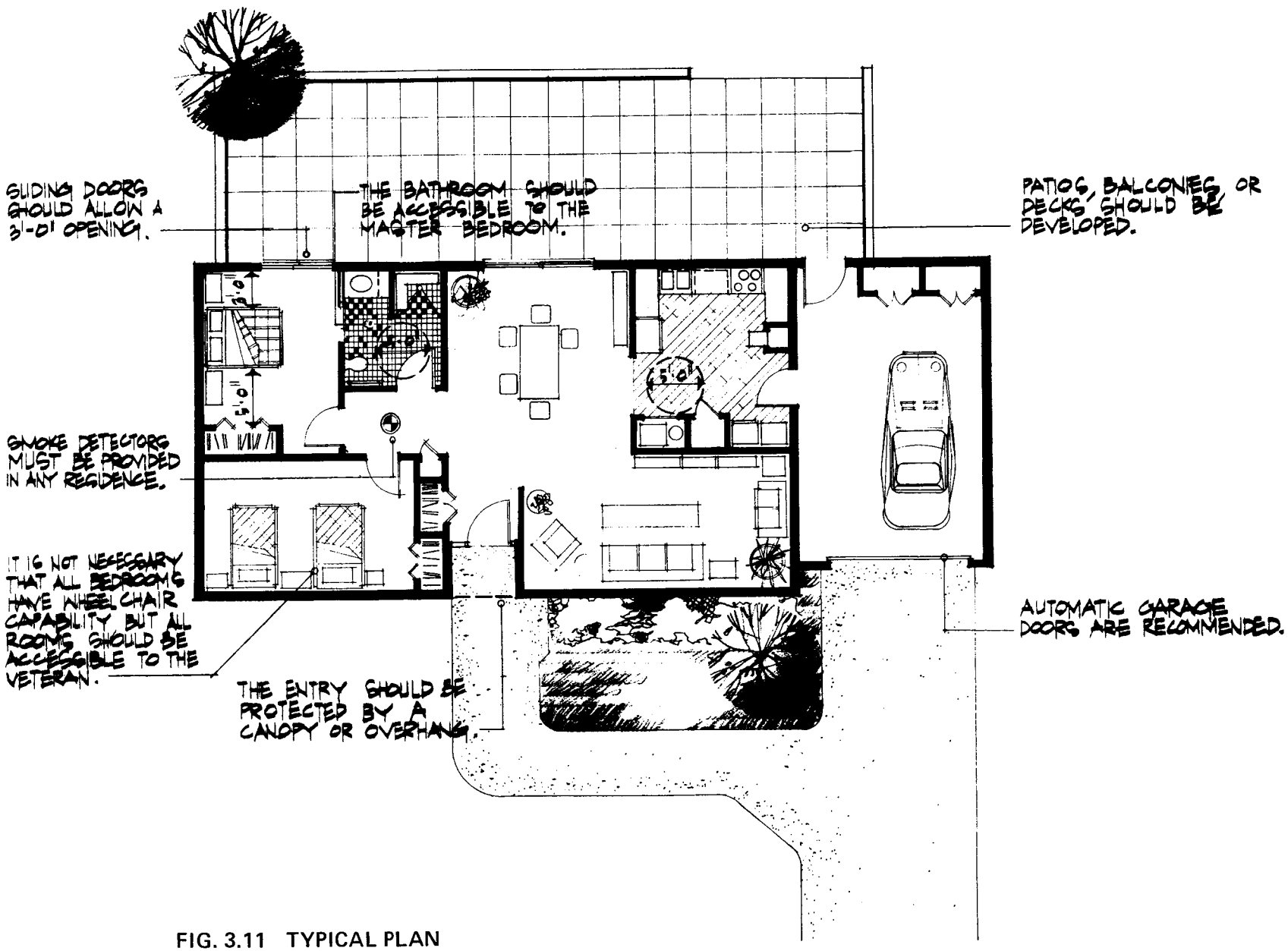

FIG. 3.11 TYPICAL PLAN

3.2 BEDROOMS

THE LOCATION AND DESIGN OF THE MASTER BEDROOM IS IMPORTANT. MOST WHEELCHAIR USERS DRESS AND UNDRESS IN BED. THEREFORE, IT IS CONVENIENT IF A BATHROOM DIRECTLY ADJOINS THE MASTER BEDROOM. FOR THE SAFETY OF THE OCCUPANT, IT IS RECOMMENDED THAT THE DESIGN PROVIDE A DIRECT MEANS OF EMERGENCY EGRESS FROM THE MASTER BEDROOM. ALTHOUGH ONLY ONE BEDROOM AND ONE BATH MUST HAVE COMPLETE WHEELCHAIR CAPABILITY, ALL ROOMS SHOULD BE ACCESSIBLE TO THE WHEELCHAIR USER. THE DOOR TO ANY ROOM MUST THEREFORE HAVE A MINIMUM WIDTH OF 3'-0". THE DESIGN OF THE MASTER BEDROOM SHOULD ACCOMMODATE THE ANTICIPATED FURNITURE ARRANGEMENT. THE BEDROOM CONFIGURATION SHOULD PROVIDE THE FOLLOWING CLEARANCES:

3.21 The bedroom should allow at least one clear area for maneuvering with a minimum diameter of 5'-0". Ideally, such an area should be provided in front of all bedroom closets.

3.22 A clear area with a minimum width of 3'-0" must be provided on at least one side of the bed. This space will allow the user to position the wheelchair for transfer to the bed. A similar clear area is desirable on the opposite side of the bed to allow the user to make up the bed. A passageway 4'-0" in width should be provided between the end of the bed and the opposite wall.

FLOOR PLANS

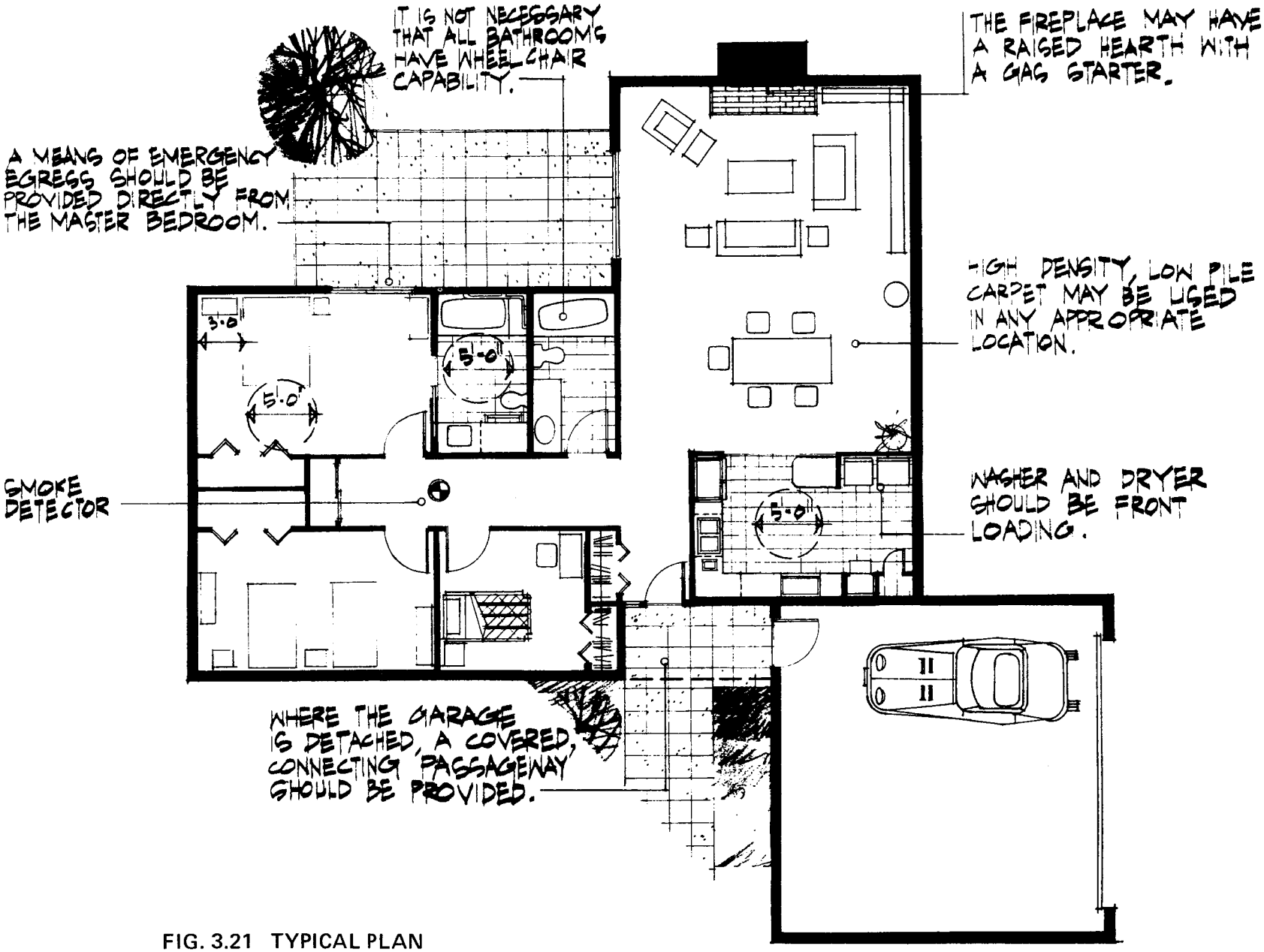

FIG. 3.21 TYPICAL PLAN

INTERIOR DETAILS

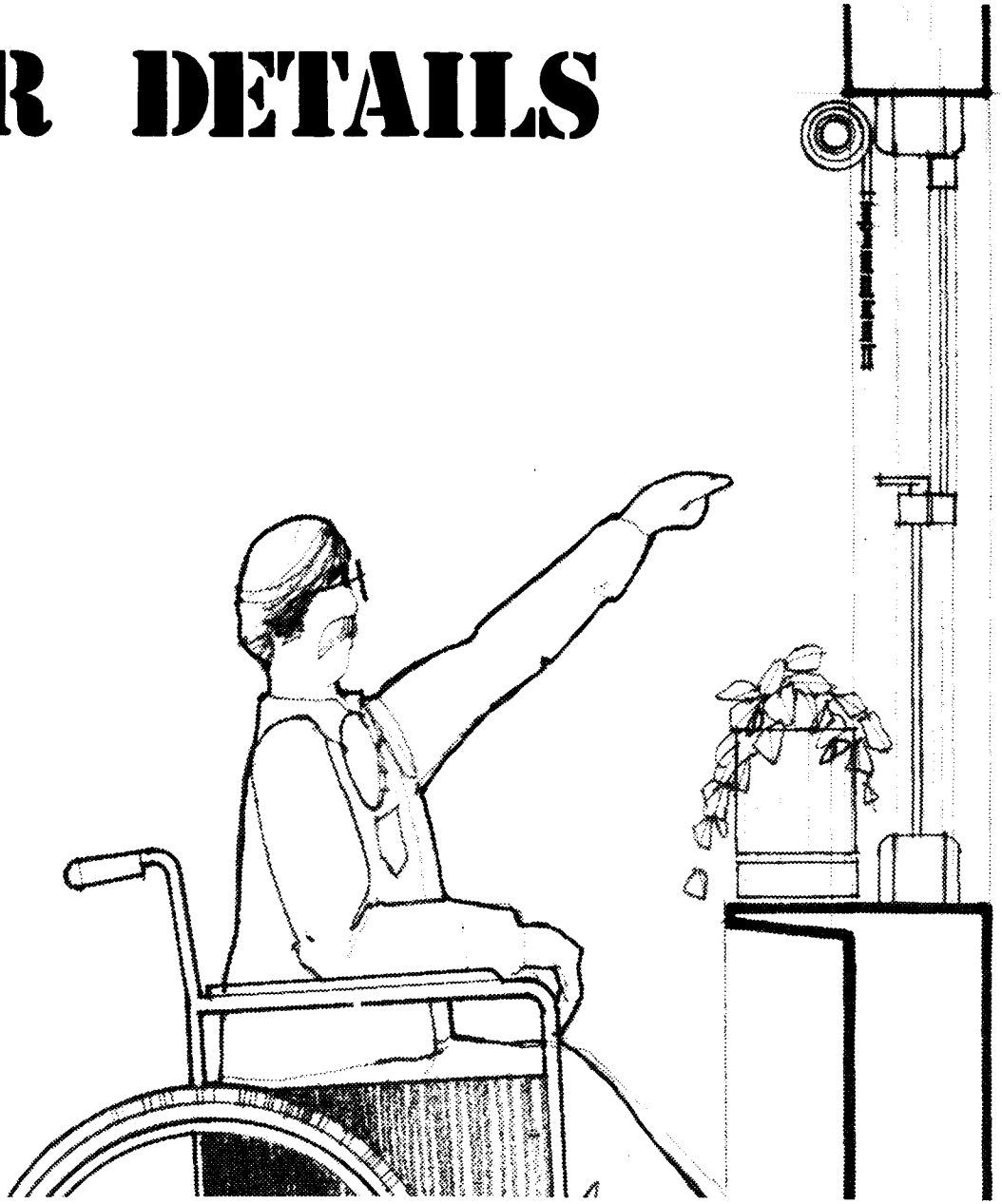

291-128 0 - 91 - 3

4.1 DOOR OPERATION

THE DESIGNER MUST PAY PARTICULAR ATTENTION TO THE LOCATION OF DOORS AND THE DIRECTION OF DOOR SWINGS. GENERALLY, DOORS SHOULD BE ARRANGED IN A MANNER WHICH PERMITS EASY APPROACH BY THE WHEELCHAIR USER AND MINIMIZES MANEUVERING REQUIRED FOR DOOR OPERATION. AVOID UNNECESSARY DOORS, DOORS IN SERIES, AND ADJACENT DOORS WITH CONFLICTING SWINGS.

4.11 The minimum width of all doors and openings is 3'-0". An opening of 2'-8" is acceptable only in renovation work where 3'-0" openings are impossible.

4.12 All doors should allow a clear area of at least 1'-6" in width adjacent to the door on the side opposite the hinges. The clear area must be provided on both sides of the door. This allows the wheelchair user to back the wheelchair to open the door. See Fig. 4.11.

4.13 A pull handle on the trailing side of the door will enable the user to pull the door closed as he or she passes through.

4.14 Doors to bathrooms or similar confined spaces should swing out. Inswinging doors pose a potential danger should the wheelchair user fall and block the door. Alternatives are sliding doors or "breakaway" hardware.

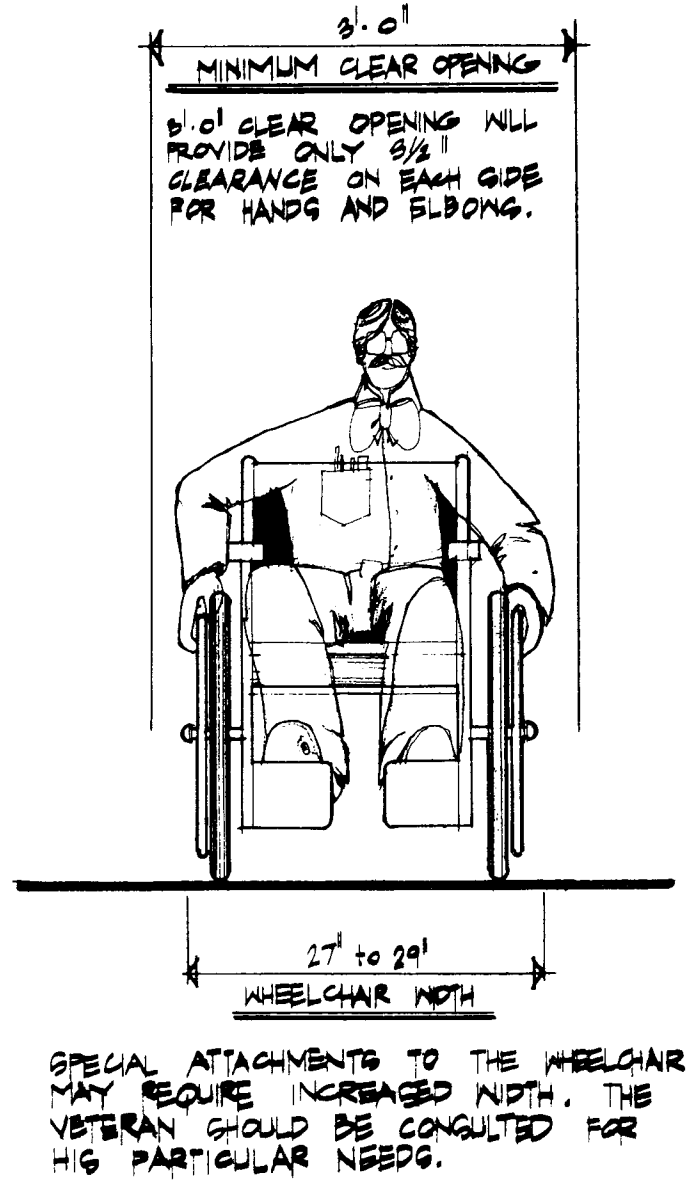

FIG. 4.11 DOOR WIDTH

1 1'-6" minimum clear area opposite door hinges is necessary for positioning the wheelchair during door opening.

This 1'-6" clear area should be provided on both sides of the door.

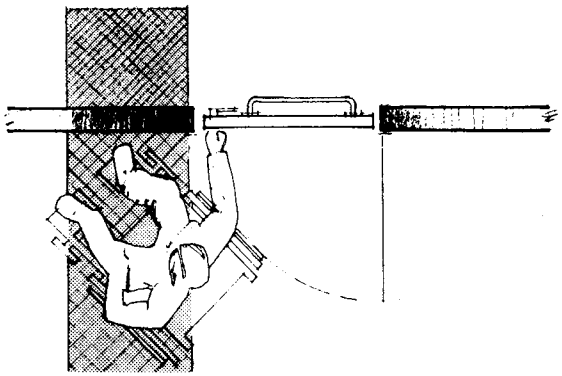

2 The door should open with a single motion and with ease of operation.

All doors must allow a minimum of 90° clear swing.

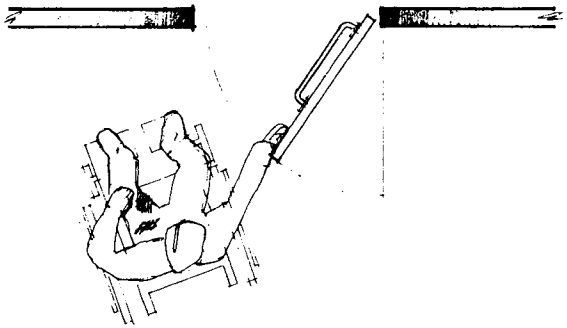

3 Door knobs and hardware should be of a size and shape to permit a good grip.

A pull bar on the trailing side of the door will help the user to pull the door closed as he or she passes through.

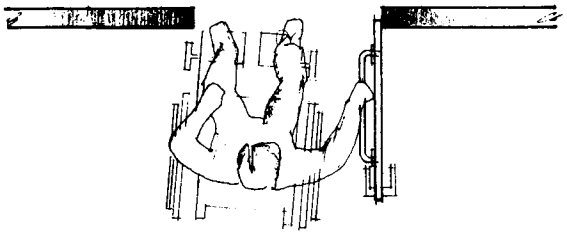

FIG. 4.12 SEQUENCE OF DOOR OPERATION

4.2 DOORS

ALL DOORS AND DOOR HARDWARE SHOULD BE CAREFULLY SELECTED AND SPECIFIED. DOOR SIZE, WEIGHT AND HARDWARE SHOULD ALLOW EASY OPERATION BY THE USER. THRESHOLDS, DIVIDER STRIPS OR SLIDING DOOR TRACKS SHOULD BE AVOIDED, IF POSSIBLE, OR RECESSED WHERE NECESSARY. WHERE DOORS ARE USED IN PAIRS, EACH LEAF MUST MEET ALL CRITERIA FOR A SINGLE DOOR. BI-FOLDING OR ACCORDION DOORS ARE EASY TO OPERATE AND MAY BE INCORPORATED AT APPROPRIATE LOCATIONS. SLIDING DOORS ARE OFTEN PRACTICAL FOR BOTH EXTERIOR AND INTERIOR USE.

4.21 Any door must be capable of being opened in a single motion. For example, locks requiring simultaneous use of both hands should be avoided.

4.22 All doors should allow easy operation (a maximum resistive force of 8 pounds is recommended for interior doors). If a door is excessively heavy or difficult to operate, the brake must be set to prevent the wheelchair rolling during the door operation.

4.23 Door closers are not normally recommended. Where closers are installed, a minimum time delay of 4 to 6 seconds is recommended.

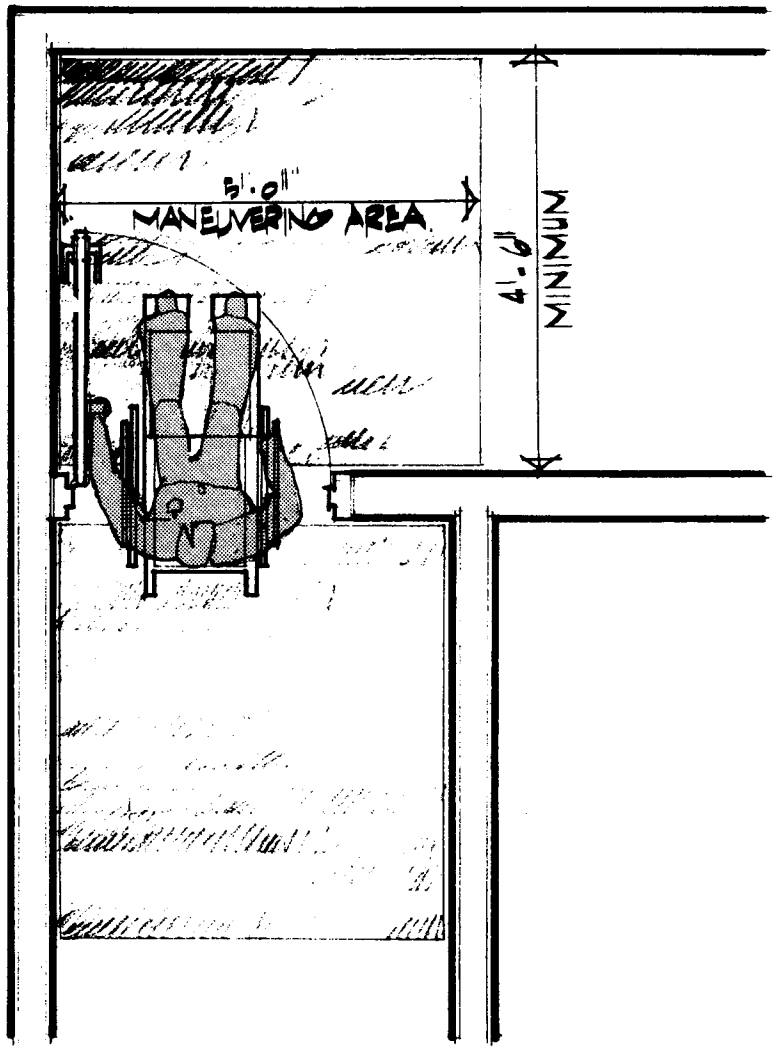

FIG. 4.21 MANEUVERING AREA

4.24 Door latch handles must be easy to grasp. Lever-type latch handles with the end of the handle turned into the door are recommended. See Fig. 4.22.

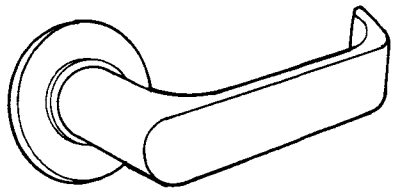

FIG. 4.22 LATCH HANDLE

4.25 A maneuvering area with a minimum length of 4'-6" should be provided on each side of all doors.

4.26 Vertical or horizontal pull handles on the trailing side of the door should be located at a height of 3'-0" to 3'-3".

4.27 Kickplates on one or both sides will protect doors from damage.

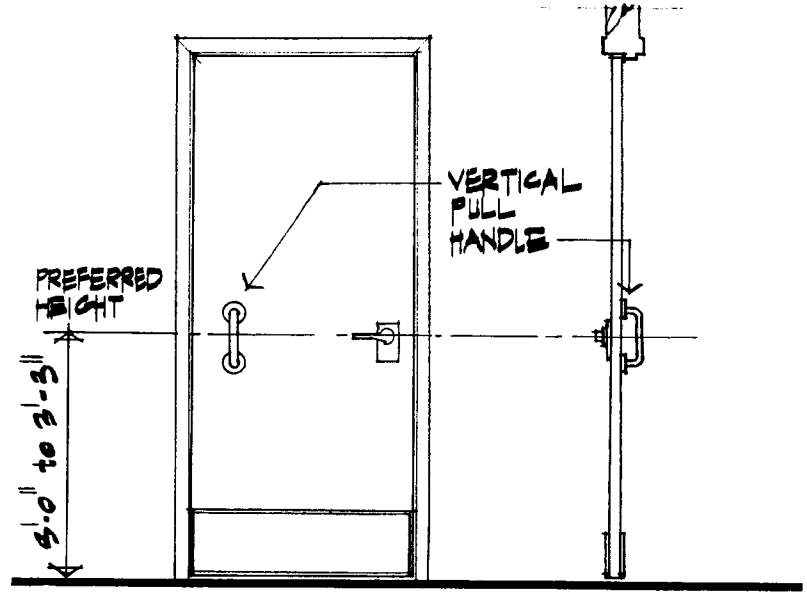

FIG. 4.23 PULL HANDLES

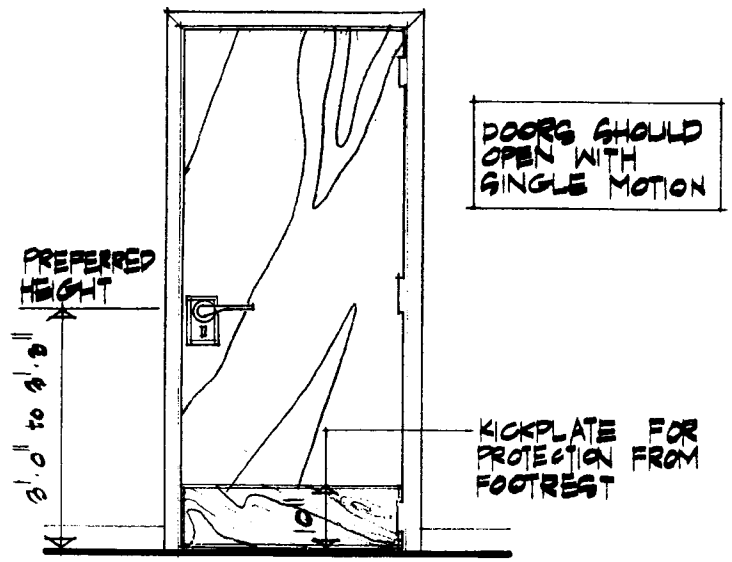

FIG. 4.24 KICKPLATES

4.3 WINDOWS

WINDOWS SHOULD BE LOCATED TO TAKE MAXIMUM ADVANTAGE OF AVAILABLE LIGHT AND NATURAL VIEWS. WINDOWS SHOULD BE EASY TO OPERATE FROM THE SEATED POSITION. MANY INDIVIDUALS FIND CASEMENT OR HOPPER-TYPE WINDOWS EASIEST TO OPERATE. PIVOTING WINDOWS, WHICH ARE HINGED SO THE EXTERIOR MAY BE CLEANED FROM INSIDE OFFER EASY MAINTENANCE. LOW WINDOWS ABOVE GROUND LEVEL SHOULD HAVE SAFETY BARS.

4.32 Windows intended for viewing should have a maximum sill height of 2'-9".

4.32 Window controls must be accessible and easy to operate. Window location may necessitate special controls such as extension bars and remote control gears. Controls should be located at a maximum height of 4'-6".

4.33 Double glazing and weatherstripping are recommended to avoid discomfort caused by drafts and temperature variations.

4.34 Controls for curtains or blinds should be accessible to the wheelchair user.

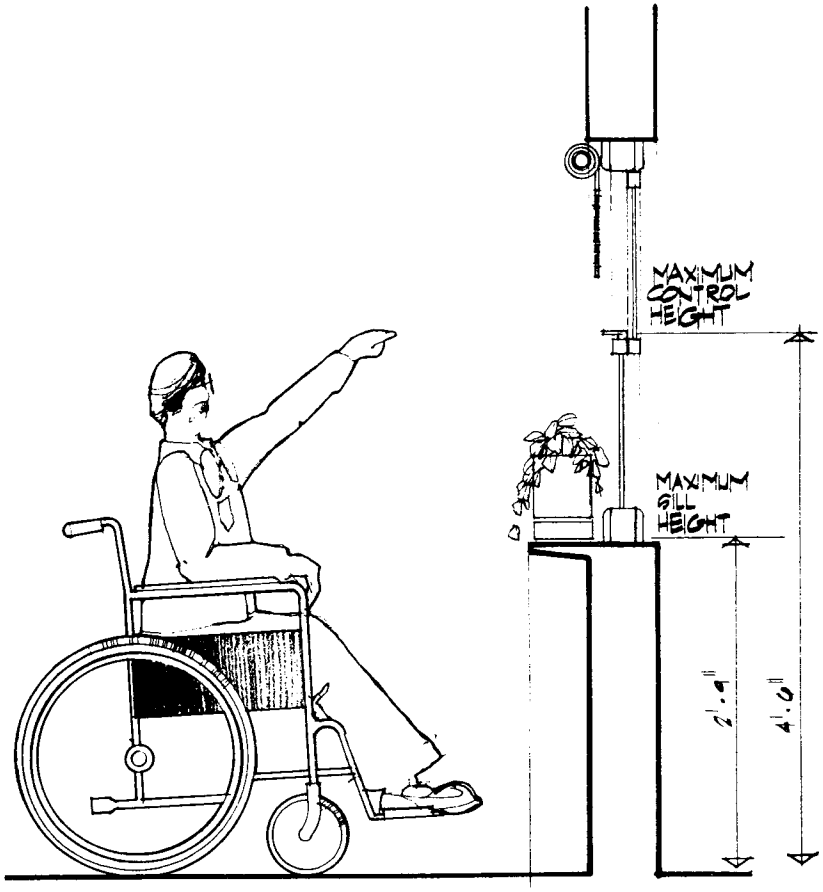

FIG. 4.32 WINDOWS

INTERIOR DETAILS

4.4 WALL SWITCHES

THE LOCATION AND ORGANIZATION OF ELECTRICAL SWITCHES IS IMPORTANT TO GOOD DESIGN. INACCESSIBLE SWITCHES OR LARGE CONFUSING GROUPS OF SWITCHES ARE OFTEN CAUSES OF FRUSTRATION. THIS CAN BE AVOIDED BY ESTABLISHING A CONSISTENT PATTERN OF SWITCH LOCATIONS THROUGHOUT THE HOUSE.

4.41 All switches should operate with a single positive action. Individuals may prefer rocker or pushbutton-type switches to normal toggle switches.

4.42 Switches and thermostats should be placed at maximum height of 4'-0". The preferred height is 3'-0" to 3'-9".

4.43 Switches adjacent to doors should be horizontally aligned with door handles to aid the user in locating the switch. At certain locations, light switches with locator lights are a convenience.

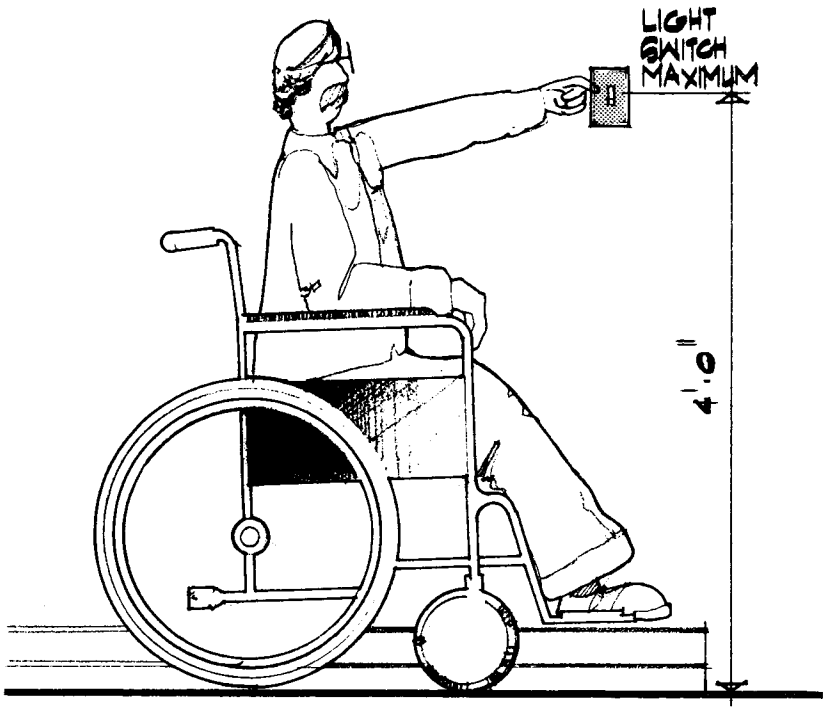

FIG. 4.41 WALL SWITCHES

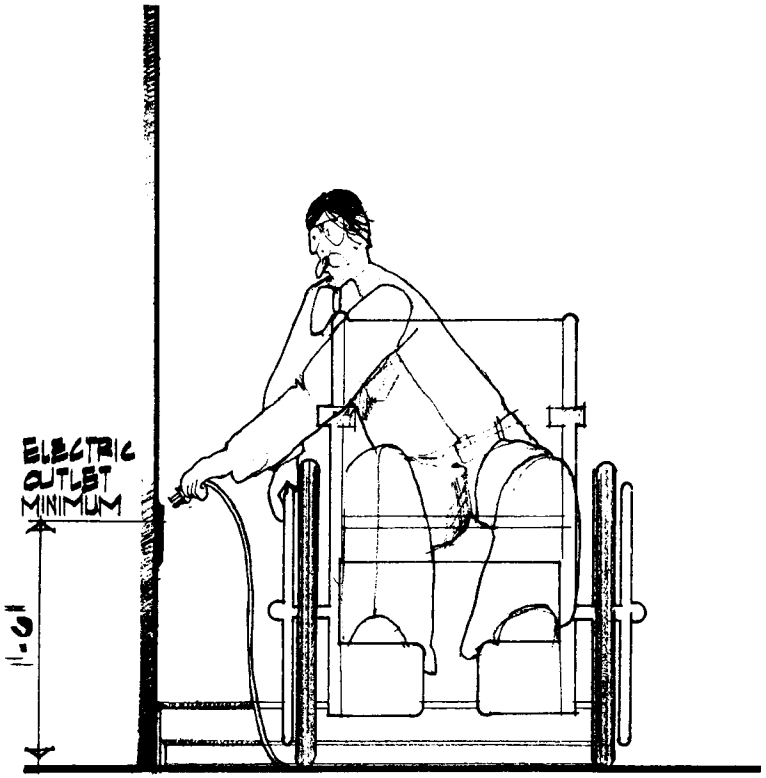

FIG. 4.42 ELECTRICAL OUTLETS

4.44 All switches and outlets must be conveniently located and easily accessible to the wheelchair user.

4.45 Wall-mounted outlets should be located at a maximum height of 4'-0" and a minimum height of 1'-6".

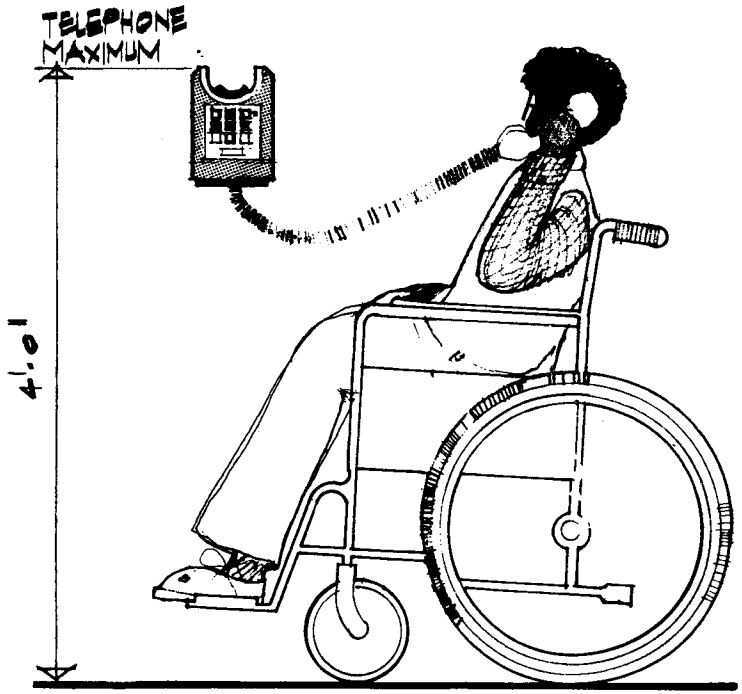

FIG. 4.43 TELEPHONES

4.46 Wall-mounted telephones should be at a maximum height of 4'-0". A height of 2'-9" to 3'-3" is preferred. Do not mount telephones above counters which restrict access.

4.47 Telephone extensions or plug-in jack outlets should be provided at critical locations such as bedrooms and bathrooms.

4.48 Many individuals find pushbutton telephones easiest to operate.

4.5 CORRIDORS

CIRCULATION WITHIN THE HOME SHOULD BE ORGANIZED TO ELIMINATE THE NECESSITY FOR LONG CORRIDORS OR SIMILAR CONFINING SPACES. WHERE CORRIDORS ARE REQUIRED, THEY SHOULD BE FREE FROM ANY OBSTRUCTIONS. SINCE THE WHEELCHAIR USER BECOMES FAMILIAR WITH MANEUVERING WITHIN HIS OR HER OWN HOME, WALL PROTECTION IS NOT NORMALLY REQUIRED. HOWEVER, WHEELCHAIR HANDRIMS AND FOOTRESTS MAY CAUSE DAMAGE TO UNPROTECTED WALL FINISHES IN NARROW CORRIDORS.

4.51 The minimum corridor width is 4'-0". A width of 5'-0" is recommended.

4.52 Doors should swing into rooms to allow unobstructed movement through corridors.

4.53 A nonscuff strip will protect wall finishes in confined spaces or heavy traffic areas. To protect against damage from wheelchair handrims, the strip should be mounted at a height of 1'-0".

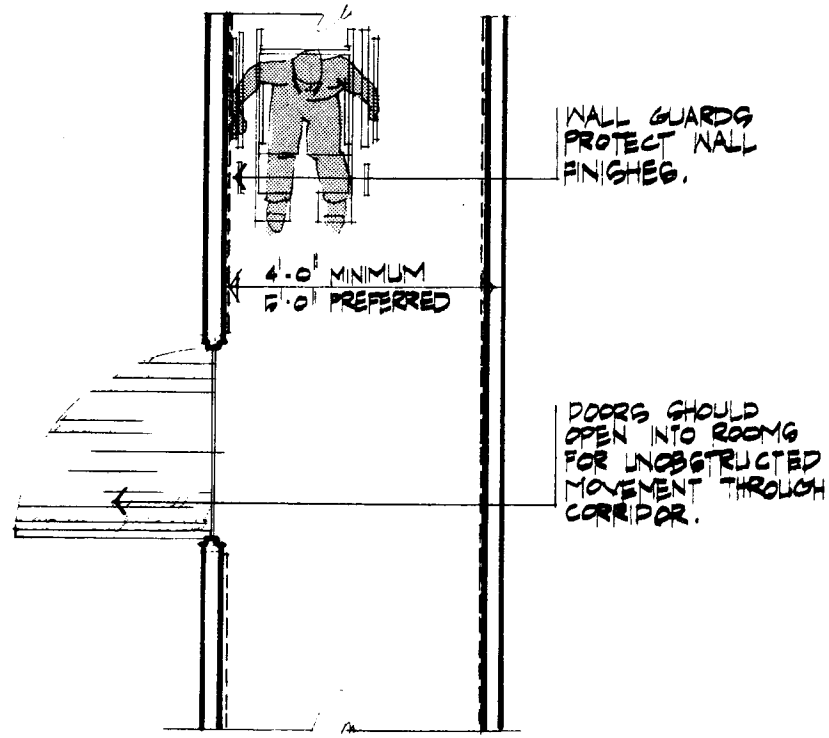

FIG. 4.51 CORRIDORS

4.6 CLOSETS

IT IS IMPORTANT THAT ANY DESIGN INCORPORATE ADEQUATE CLOSET AND STORAGE SPACE IN CONVENIENT AND ACCESSIBLE LOCATIONS. ADEQUATE ROOM FOR WHEELCHAIR MANEUVERING SHOULD BE PROVIDED IN FRONT OF ALL CLOSETS. ACCESS TO CLOSETS MAY BE PROVIDED BY BI-FOLDING DOORS, ACCORDION DOORS OR SLIDING DOORS. IN THE MASTER BEDROOM, A COMBINATION DRESSING ROOM AND CLOSET OFFERS AN EXCELLENT ALTERNATIVE TO TRADITIONAL CLOSET ARRANGEMENTS.

4.61 A clothes hanger rod at a height between 3'-6" and 4'-0" is adequate for most clothing and within easy reach of the wheelchair user. The maximum rod height is 4'-6". Adjustable hanger rods are often provided.

4.62 Shelves should be mounted at a maximum height of 4'-6". Shelf depths should not exceed 1'-4".

4.63 Where sliding doors are used, floor-mounted tracks or guides must not pose an obstruction to the wheelchair user.

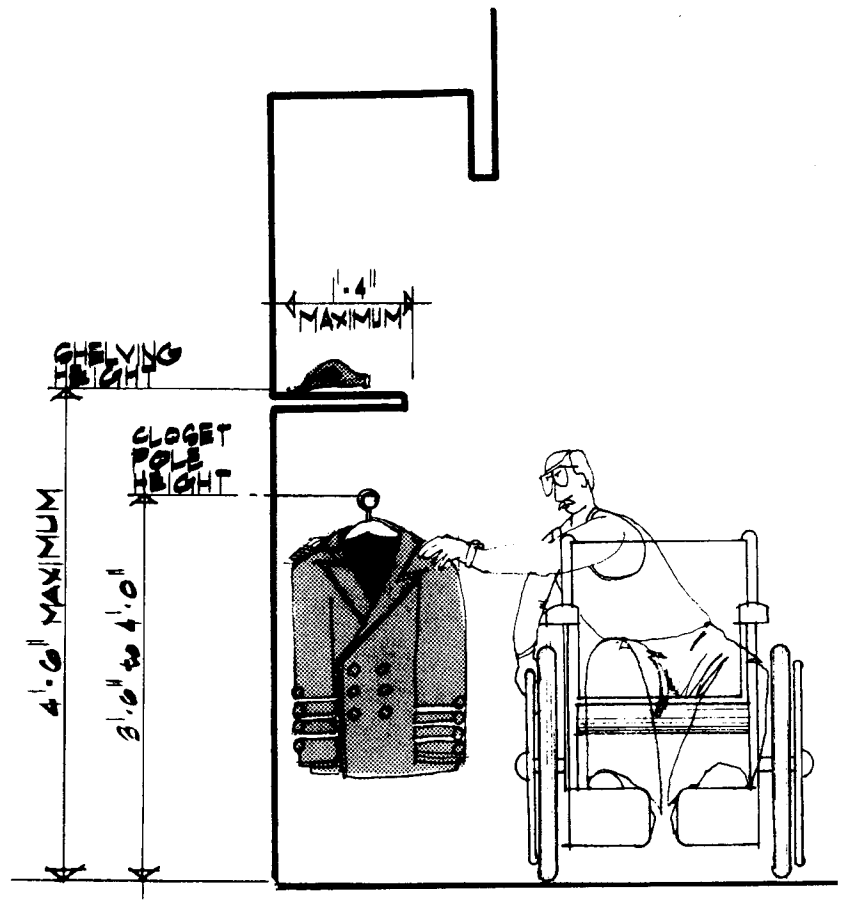

FIG. 4.61 CLOSETS

4.7 STAIRS

ANY RESIDENCE IDEALLY SHOULD HAVE ALL NECESSARY FACILITIES ON ONE LEVEL. UNUSUAL CIRCUMSTANCES, HOWEVER, OCCASIONALLY NECESSITATE THE MODIFICATION OF AN EXISTING MULTISTORY HOME. WHERE STAIRS ARE PROVIDED, SPECIAL ATTENTION MUST BE PAID TO RISER DESIGN. (SEE WALKS & RAMPS, 2.2.) FOR THE WHEELCHAIR USER, WHEELCHAIR LIFTS OR INCLINED ELEVATORS MAY BE ADAPTED TO EXISTING STAIRS.

4.71 Inclined elevators offer an alternative to the climbing of stairs. Such elevators are easily installed and require minimum modification to existing stairs. Inclined elevators are generally not suitable for wheelchair users.

4.72 Wheelchair lifts suitable for installation on most existing stairs are commercially available. When not in operation, the lift stores at the bottom of the stairs to permit normal use of the stairway.

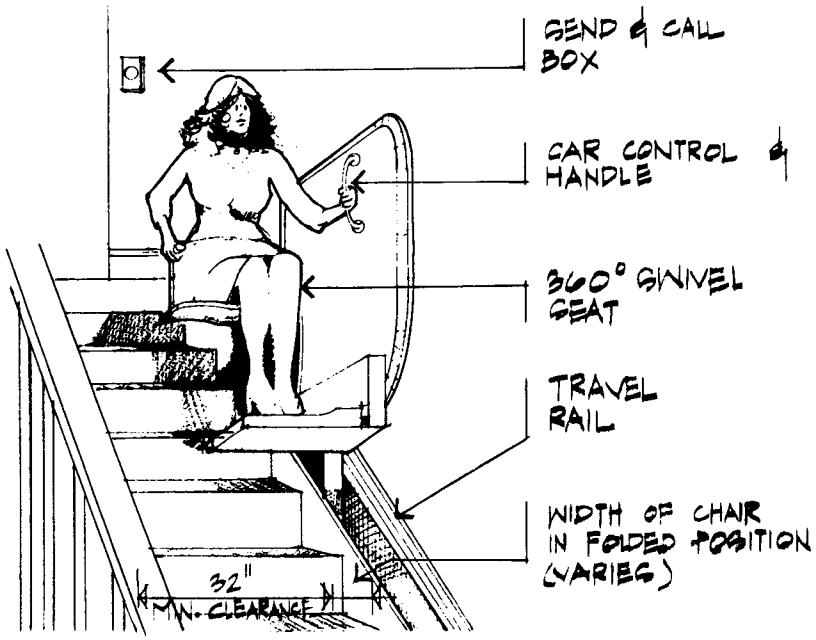

FIG. 4.71 INCLINED ELEVATOR

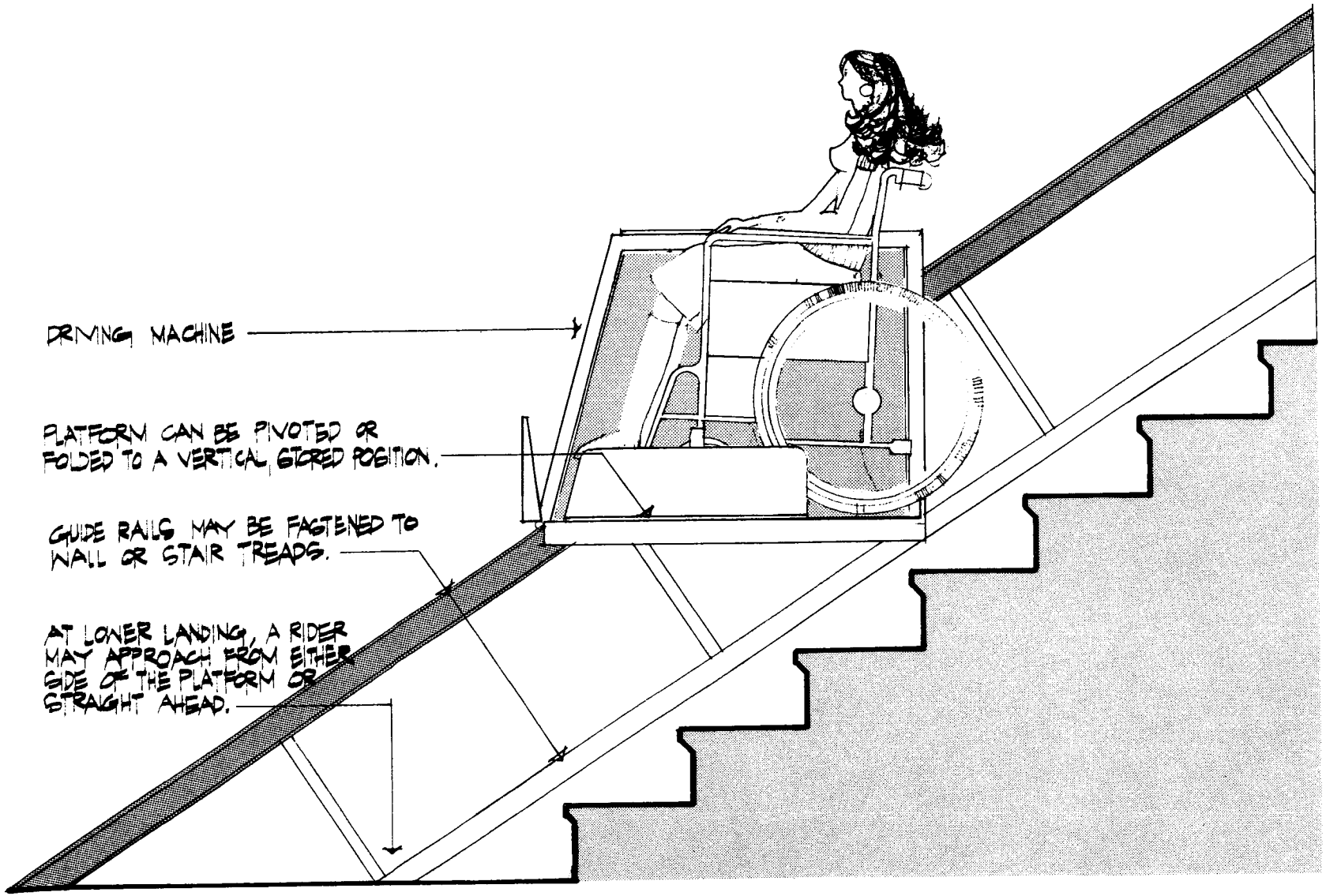

FIG. 4.72 WHEELCHAIR LIFT

BATHROOMS

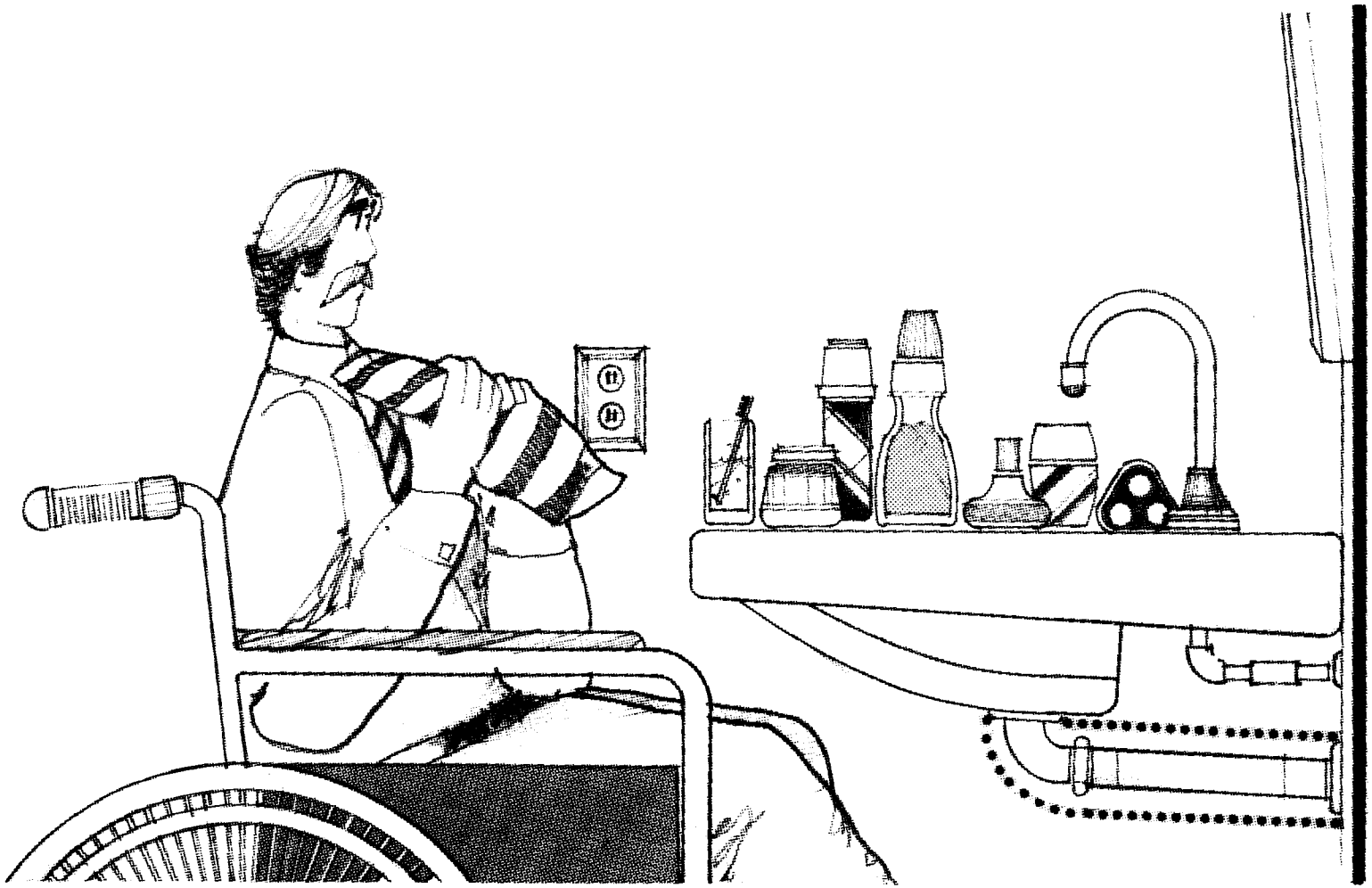

5.1 BATHROOM ARRANGEMENTS

THE BATHROOM IS PERHAPS THE MOST DIFFICULT DESIGN PROBLEM IN ANY RESIDENCE. THE BATHROOM IS A RELATIVELY CONFINED SPACE AND YET EXTENSIVE MANEUVERING IS USUALLY NECESSARY. THE BATHROOM ARRANGEMENT MUST ALLOW THE INDIVIDUAL TO TRANSFER FROM THE WHEELCHAIR TO VARIOUS BATHROOM FIXTURES (e.g., toilet, bathtub, shower, etc.).

TO PERFORM THIS TRANSFER, THE INDIVIDUAL MUST FIRST BE ABLE TO MANEUVER THE WHEELCHAIR TO A CONVENIENT LOCATION. THE USER THEN TRANSFERS, WITH THE AID OF GRAB BARS, FROM THE WHEELCHAIR TO THE FIXTURE. THIS TRANSFER IS EASIEST IF THE PARTICULAR FIXTURE IS APPROXIMATELY THE SAME HEIGHT AS THE WHEELCHAIR SEAT (1'-8" average). WHILE STIRRUP GRIPS OR SUSPENDED HOISTS AID IN TRANSFER, GRAB BARS SHOULD ALSO BE INCORPORATED TO PROVIDE SUPPORT DURING THE PERIOD THE INDIVIDUAL IS OUT OF THE WHEELCHAIR. ALL ACCESSORIES, SUCH AS SOAP DISHES, TOILET PAPER HOLDERS, TOWEL RODS, OR ELECTRICAL OUTLETS, MUST BE CONVENIENT TO THE APPROPRIATE BATHROOM FIXTURE.

EACH INDIVIDUAL WILL HAVE HIS OR HER OWN PERSONAL TRANSFER TECHNIQUE. ADDITIONALLY, THE INDIVIDUAL WILL USUALLY PREFER A PARTICULAR DIRECTION OF TRANSFER, EITHER FROM THE LEFT OR FROM THE RIGHT. WHEN POSSIBLE, BATHTUBS, TOILETS, AND SHOWER SEATS SHOULD BE LOCATED TO ACCOMMODATE THAT PREFERENCE.

5.11 Any bathroom arrangement should provide a clear area for maneuvering. To accommodate wheelchair maneuvering, this clear area should have a minimum diameter of 5'-0". This 5'-0" circle corresponds to the turning radius of the average wheelchair and should be adjusted as necessary.

5.12 A clear area 4'-0" in length should precede all bathroom fixtures.

5.13 Where the lavatory and the toilet are located on the same wall, separation between fixtures must be maintained. To accommodate "Parallel Transfer" (see Fig. 5.33), a minimum of 4'-0" should be provided between the centerline of the toilet and the edge of the lavatory. See Fig. 5.11.

5.14 Lavatories adjacent to a wall should be located with the centerline of the basin a minimum of 1'-6" from the wall. In order to provide grab-bar anchorage, toilets should be located with the centerline of the fixture 1'-6" from the adjacent wall. If the toilet is not located adjacent to a wall, the centerline of the grab-bar should be located 1'-4" from the centerline of the toilet.

5.15 All shelving, towel rods, and electrical outlets should be located at a convenient height and should be within easy reach.

BATHROOMS

5.16 Due to space limitations and safety considerations, it is recommended that outswing doors be used in all bathrooms. If the door must swing into the bathroom, "breakaway" hardware should be used. See DOOR OPERATION, 4.14.

5.17 Bathroom floors should be of nonslip material.

5.18 Telephone jacks or extensions should be considered for the bathroom for both convenience and safety.

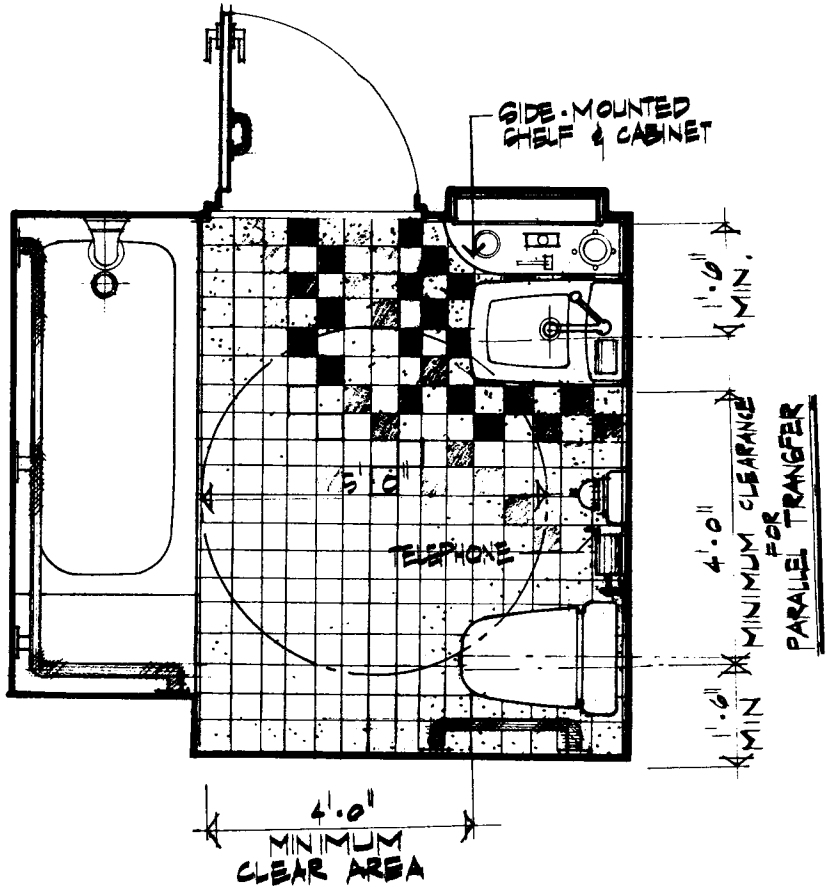

FIG. 5.11 TYPICAL BATHROOM ARRANGEMENT

5.2 BATHROOM FIXTURES

ALL BATHROOM FIXTURES MUST BE CAREFULLY SELECTED AND LOCATED TO BEST SUIT THE INDIVIDUAL'S NEEDS. SPECIAL ATTENTION SHOULD BE PAID TO THE SELECTION OF A PROPER LAVATORY OR BASIN, FAUCETS, AND APPROPRIATE ACCESSORIES.

5.21 Floor-mounted or wall-hung water closets should generally have a seat height of 1'-8". For some individuals, slight adjustments in height may be required to facilitate transfer to or from the wheelchair.

5.22 A horizontal grab bar at a height of 2'-9" should be provided adjacent to the water closet to aid the individual to transfer to or from a wheelchair. If an individual prefers the "front transfer" as illustrated in figure 5.32, grab bars should be provided on both sides.

5.23 Grab bars should be 1-1/2" in diameter, and anchorage must be adequate to support the individual's weight. Typical grab bar locations are illustrated; however, individual needs must be considered. As a general rule, horizontal grab bars are used for "pushing up" while vertical grab bars are used for "pulling up."

5.24 Lavatories should be mounted at a maximum height of 2'-10". Lavatory basins should have as shallow a profile as possible to maximize knee space below. Lavatories should project approximately 2'-3" from the wall.

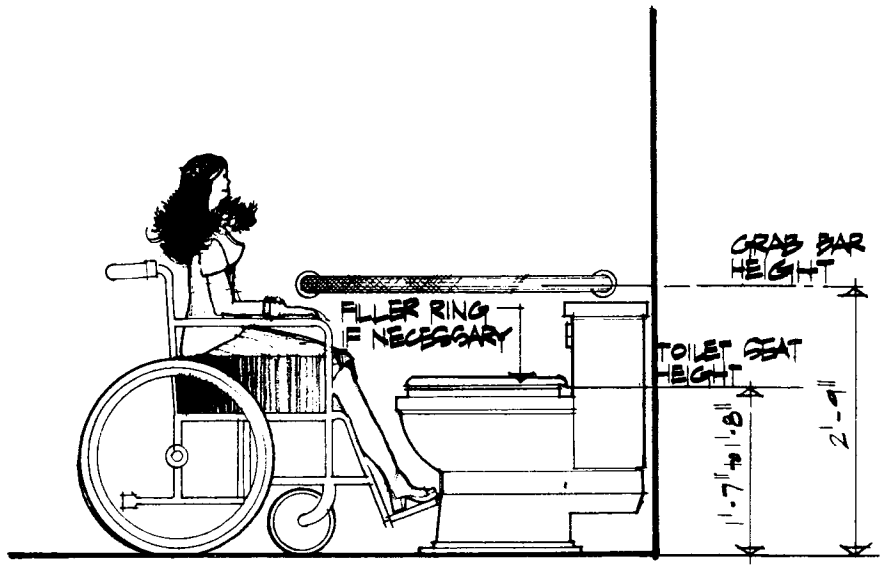

FIG. 5.21 FLOOR-MOUNTED WATER CLOSET

5.25 All exposed water supply and drain lines must be insulated to prevent burns and scrapes.

5.26 The water spigot should be a minimum of 4" clear of any rear obstruction and at least 4" above the lavatory rim to allow for ease of rinsing. Lever-type temperature controls are recommended.

5.27 To maximize knee space below the lavatory, "P" traps in drain lines should be offset horizontally or traps may be located "in wall" with an access panel.

5.28 Shelving and medicine cabinets should be carefully located within easy reach. (See Fig. 5.11 and Fig. 5.23).

5.29 Mirrors should be tilted or lowered to accommodate the individual in a seated position. The bottom edge of a flat mirror should be no higher than 3'-0".

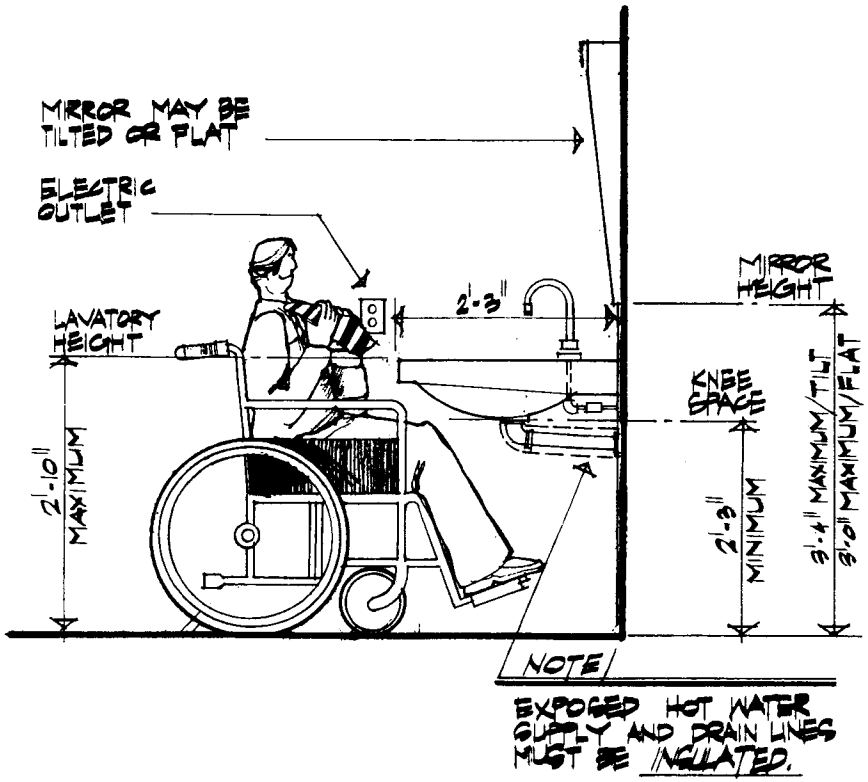

FIG. 5.22 LAVATORY

5.2 BATHROOM FIXTURES

5.30 A vanity with a built-in basin offers an attractive and functional alternative to the lavatory. However, it is necessary to provide adequate knee space below the basin.

5.31 The vanity height should not exceed 2'-10". The knee space below the vanity should have a minimum height of 2'-3" and a minimum width of 3'-0". Vanity tops should be approximately 2'-3" deep. Insulation for water supply and drain lines must be provided. All exposed edges of the vanity top should be rounded.

5.32 Faucets should be located at a maximum distance of 1'-9" from the edge of the vanity. This distance corresponds to the comfortable forward reach of an individual in the seated position.

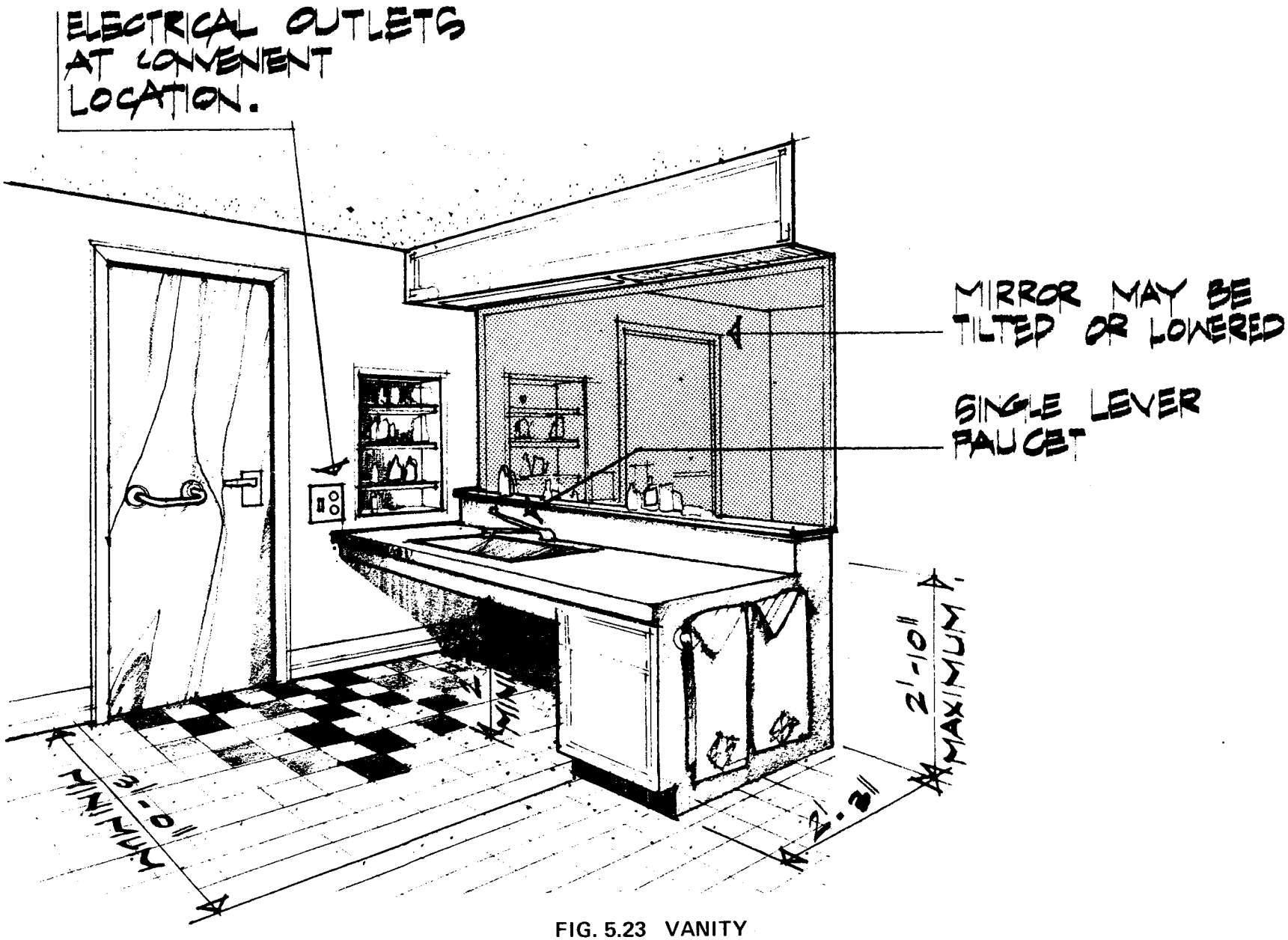

FIG. 5.23 VANITY

5.3 TRANSFER SEQUENCES

THE THREE COMMON TECHNIQUES FOR TRANSFERRING TO A TOILET FROM A WHEELCHAIR ARE ILLUSTRATED. EACH INDIVIDUAL WILL HAVE HIS OR HER PERSONAL TECHNIQUE AND IT IS IMPORTANT THAT THE DESIGN ACCOMMODATE THAT TECHNIQUE. USUALLY AN INDIVIDUAL WILL HAVE A PREFERENCE FOR LEFT OR RIGHT TRANSFER AND THE FIXTURE SHOULD BE LOCATED ACCORDINGLY.

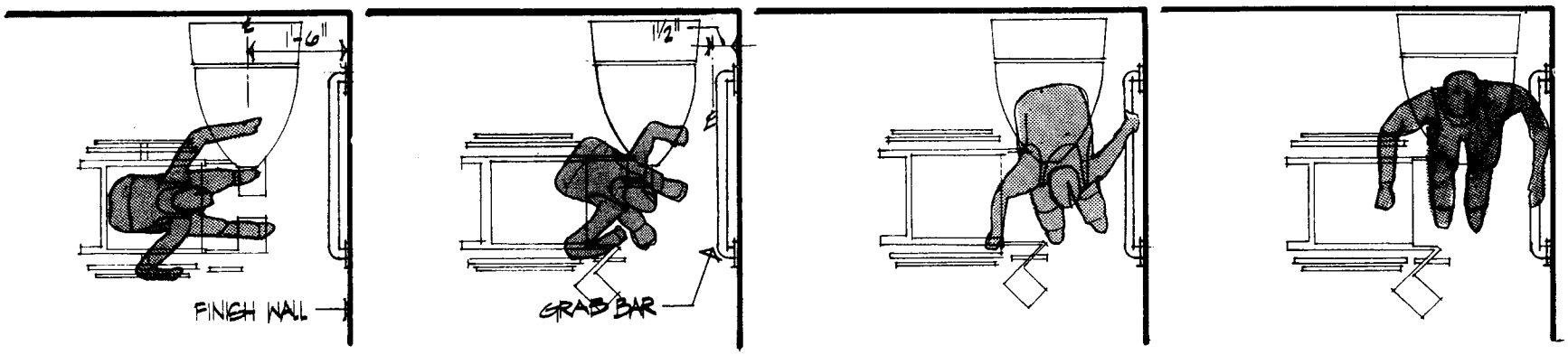

1 THE USER APPROACHES THE TOILET FROM THE SIDE.

2 REMOVES THE ARMREST AND SWINGS THE FOOTREST TO THE SIDE. ONE HAND IS PLACED ON TOILET SEAT AND THE OTHER HAND IS PLACED ON THE WHEELCHAIR.

3 WITH A LIFTING AND SLIDING MOTION THE TORSO IS SHIFTED ON TO THE SEAT.

4 BALANCE IS MAINTAINED BY USING THE GRAB BAR AND THE WHEELCHAIR.

FIG. 5.31 SIDE TRANSFER SEQUENCE

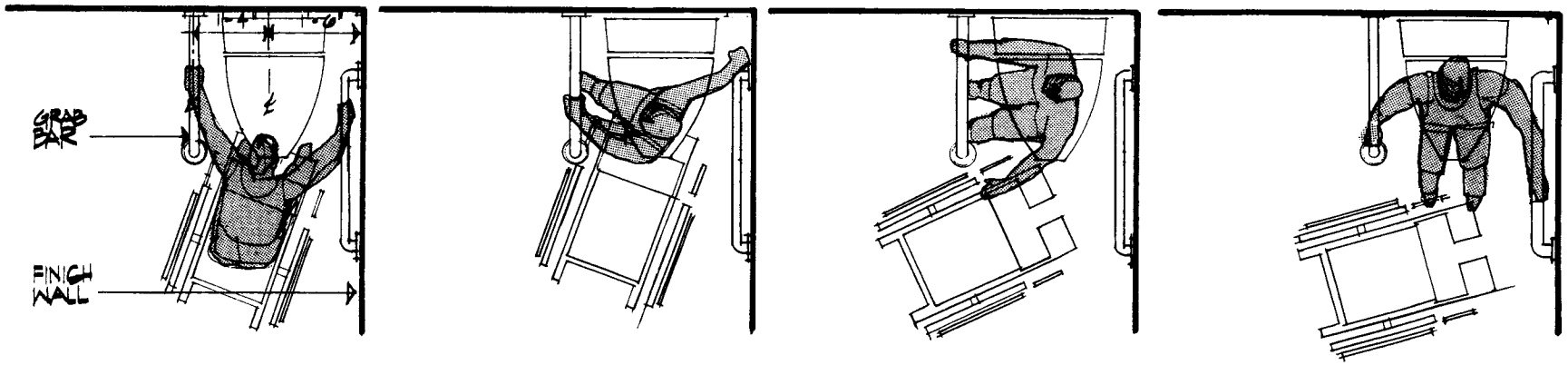

1 TO CLEAR FOOTRESTS, USER APPROACHES AT ANGLE. HANDS ARE PLACED ON THE GRAB BARS.

2 THE BODY IS PULLED FORWARD AND ROTATED. TORSO IS SHIFTED TO A SIDEWAYS SEATED POSITION.

3 THE WHEELCHAIR IS PUSHED CLEAR.

4 THE USER ROTATES WHILE BALANCE IS MAINTAINED WITH BOTH GRAB BARS.

FIG. 5.32 FRONT TRANSFER SEQUENCE

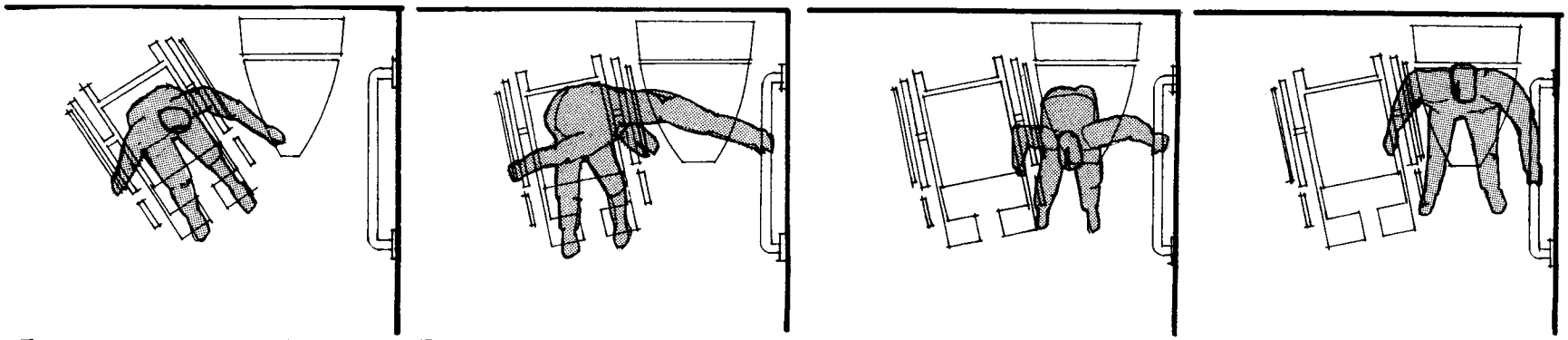

1 THE WHEELCHAIR IS POSITIONED AS CLOSE AS POSSIBLE TO THE TOILET.

2 THE ARMREST IS REMOVED FROM THE WHEELCHAIR.

3 THE USER REACHES ACROSS TO THE GRAB BAR AND SLIDES SIDEWAYS TO THE SEAT.

4 BALANCE IS MAINTAINED BY USING THE GRAB BAR AND THE WHEELCHAIR.

FIG. 5.33 PARALLEL TRANSFER SEQUENCE

5.4 BATHTUBS

SOME INDIVIDUALS MAY PREFER USING A BATHTUB RATHER THAN A SHOWER. THE BATHTUB LOCATION MUST ALLOW EASY APPROACH AND PROVIDE ADEQUATE SPACE TO POSITION A WHEELCHAIR FOR TRANSFER. TUB ORIENTATION SHOULD REFLECT THE INDIVIDUAL'S PREFERENCE FOR LEFT OR RIGHT TRANSFER.

5.41 A platform or seat at the end of the bathtub aids the wheelchair user in transferring to and from the bathtub. This platform should be at the same level as the bath rim and be of the same width as the bathtub. The design must provide a clear area beside the platform to position a wheelchair for transfer. Bathtub height should ideally be set at 1'-8".

5.42 Grab bars or a suspended hoist or stirrup grip attached to the ceiling should be provided to aid the transfer. Grab bars along one side of the tub provide support during bathing.

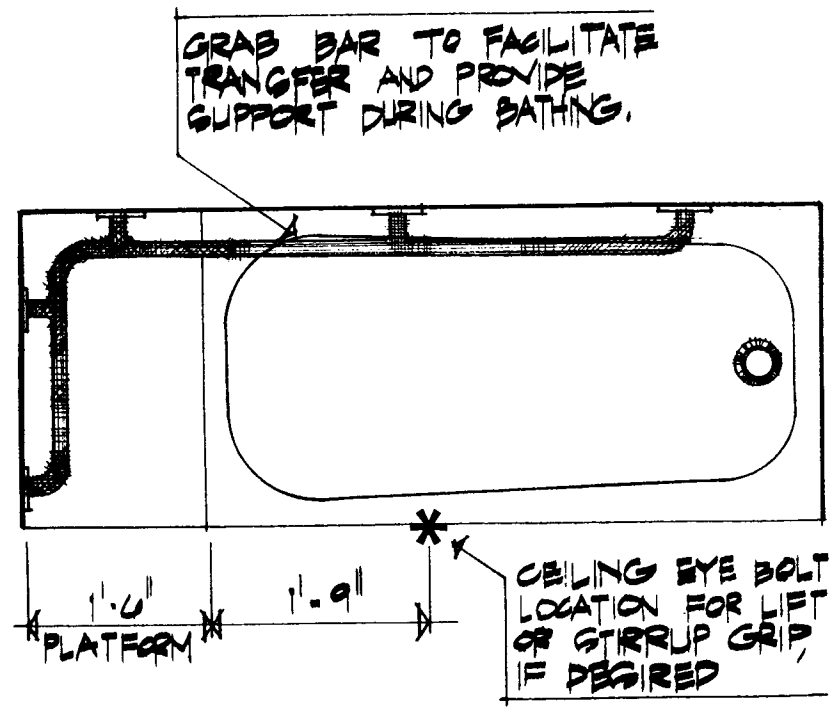

FIG. 5.41 BATHTUB

5.43 Bathtub controls must be easily accessible before and during immersion. Some individuals may prefer side-mounted controls and remote control drain operation.

5.44 The most flexible solution is the bathtub and shower combination. This may be used by a person sitting in the bath, seated on the platform, or standing in the bath. A hand-held shower head should be provided and all controls must be carefully located to be accessible from the platform or the bathtub. Thermostatic controls must be provided to protect against a sudden change in water temperature.

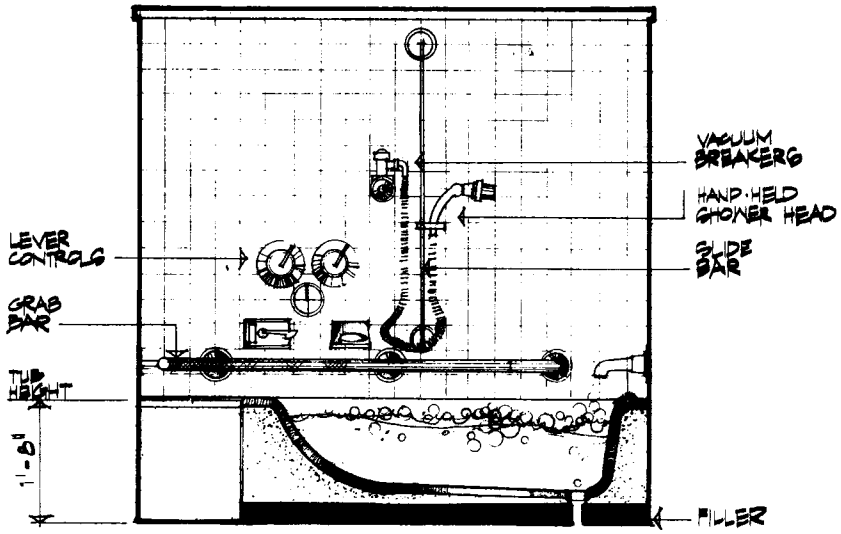

FIG. 5.42 COMBINATION BATHTUB/SHOWER

5.5 SHOWERS

MANY WHEELCHAIR USERS PREFER SHOWERS TO BATHS, SINCE TRANSFER IS USUALLY LESS DIFFICULT OR NOT NECESSARY AT ALL. THERE ARE TWO GENERAL TYPES OF SHOWERS. THE FIRST TYPE IS EQUIPPED WITH A SEAT TO WHICH THE INDIVIDUAL TRANSFERS FROM THE WHEELCHAIR FOR SHOWERING. THE SECOND TYPE OF SHOWER IS A "ROLL-IN" SHOWER. IN THIS CASE, A SECOND WHEELCHAIR (USUALLY STORED IN THE SHOWER ITSELF) IS USED AND THE INDIVIDUAL REMAINS IN THIS WHEELCHAIR FOR SHOWERING. IN EITHER CASE, THE WHEELCHAIR MUST PARTIALLY OR FULLY ENTER THE SHOWER AND THEREFORE ANY SHOWER SHOULD HAVE A MINIMUM OPENING OF 3'-6" WITHOUT ANY CURB.

5.51 The minimum size of any wheelchair shower is 4'-0" by 4'-0". The minimum shower opening is 3'-6", except where a door is provided for a "roll-in" shower.

5.52 Showers should not have curbs or thresholds which impede wheelchair access.

5.53 Shower floors (as well as bathroom floors) should be of a nonslip material.

5.54 Thermostatic controls must be installed to protect the user from sudden changes in water temperature. Many people find lever-handle temperature controls easiest to operate. All controls *must* be easily accessible to the shower occupant.

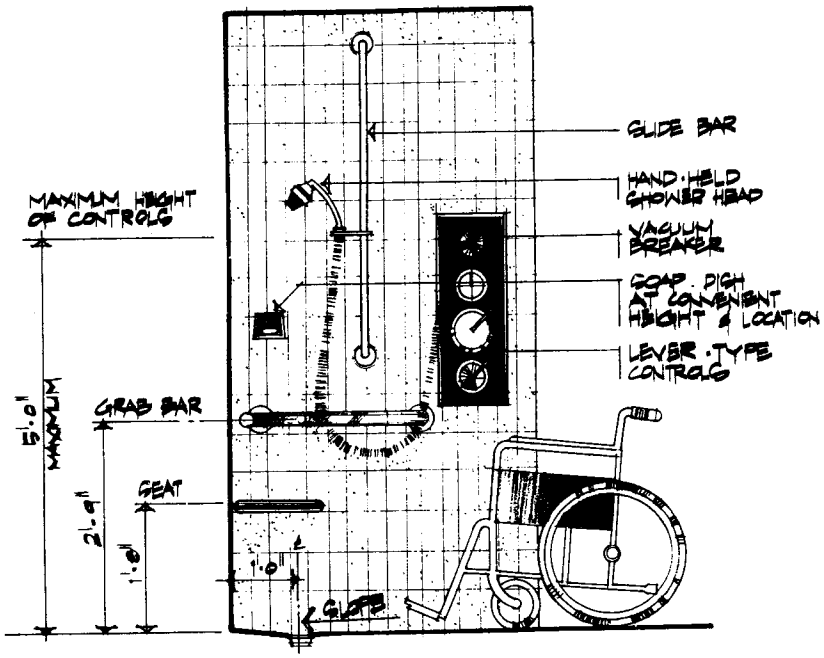

FIG. 5.51 SHOWER

5.55 A bench seat may be incorporated in the shower. This seat may be hinged to fold up against the wall when not in use. The seat should be mounted at a height of approximately 1'-8". Grab bars or a suspended stirrup grip should be provided to aid in transfer to the seat. Grab bars also provide support during showering.

5.56 Where shower seats are incorporated, they should be positioned consistent with the veteran's preference for left or right transfer.

5.57 All showers should be equipped with a flexible hose and hand-held shower head. The hand-held shower head should be stored within easy reach of the shower occupant.

5.58 Curtains are normally provided to help contain water within the shower. Small "wing walls" may be incorporated if they do not restrict access or impede transfer. Doors are sometimes used in "roll-in" showers and may incorporate a rubber sweep strip to prevent the escape of water. Shower doors must meet all the requirements of other interior doors. See Doors, 4.2.

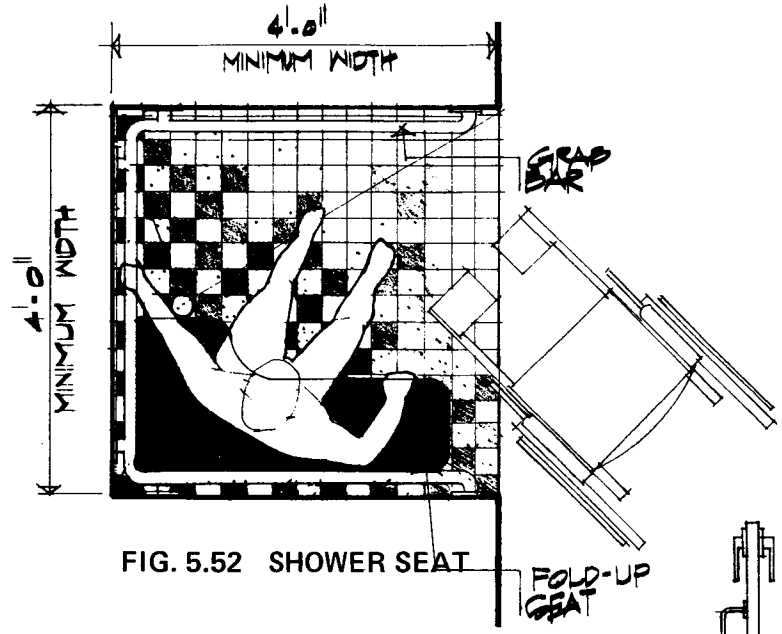

FIG. 5.52 SHOWER SEAT

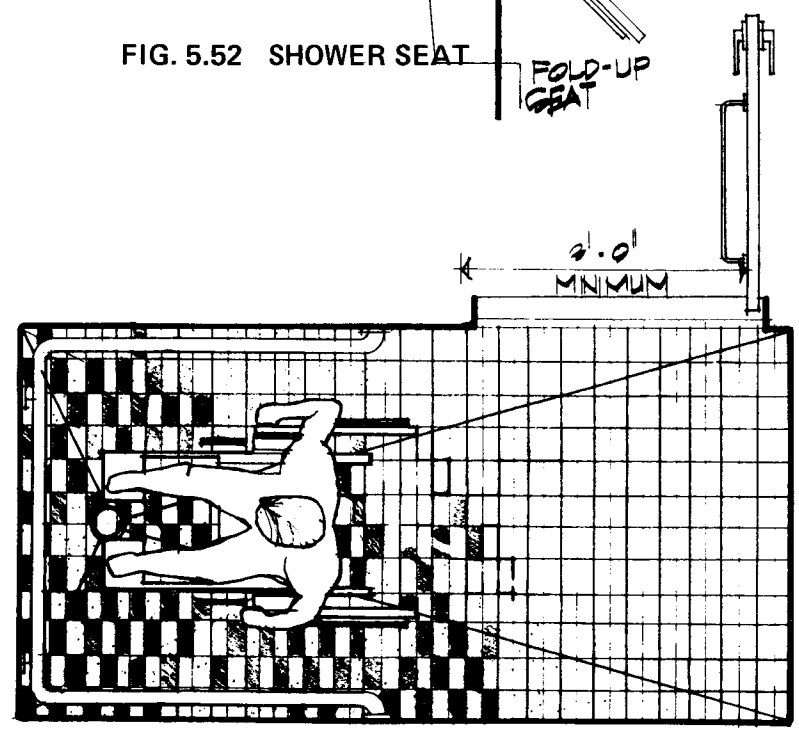

FIG. 5.53 "ROLL-IN" SHOWER

KITCHENS

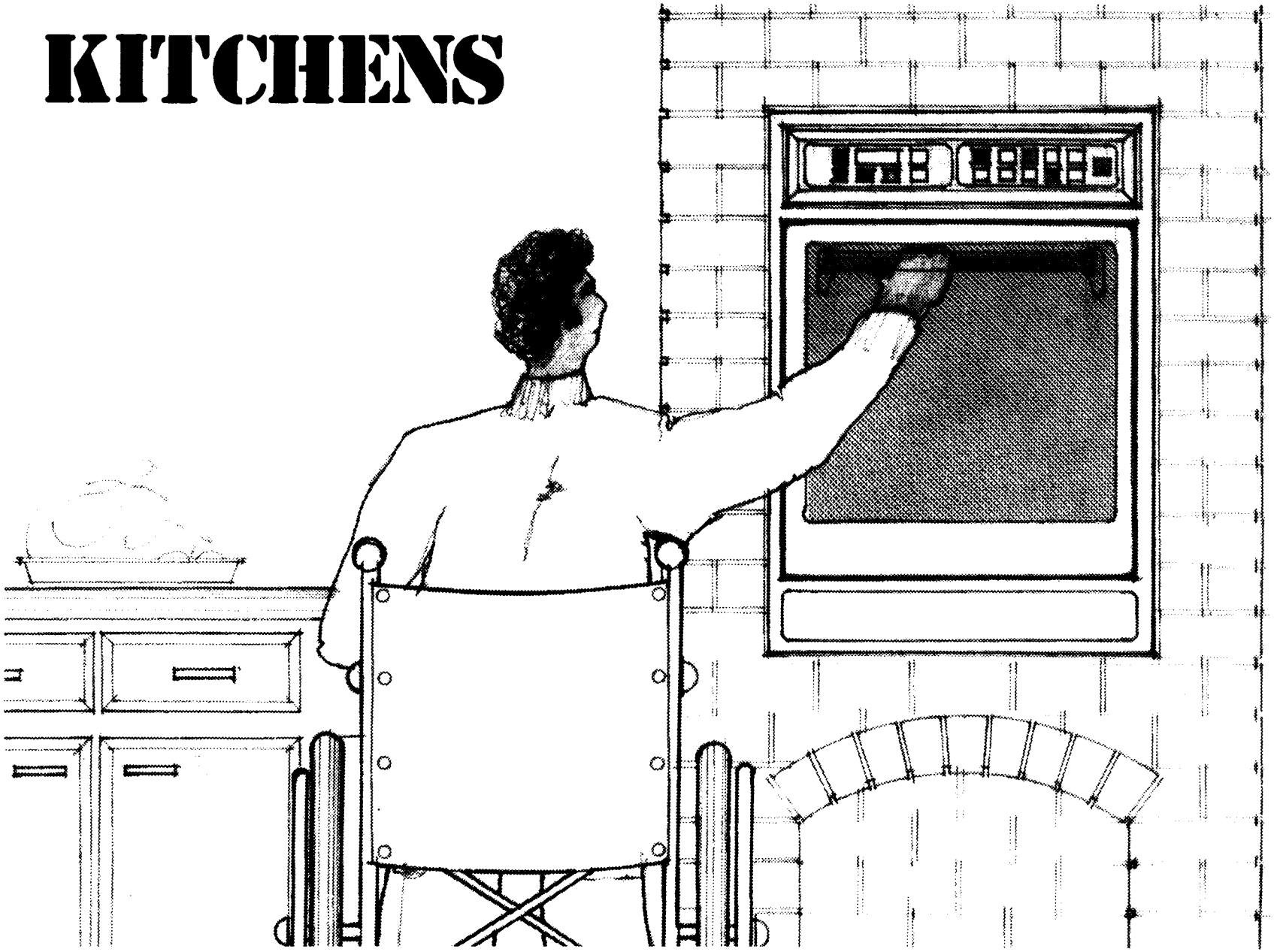

6.1 KITCHEN ARRANGEMENTS

THE KITCHEN ARRANGEMENT SHOULD ALLOW ADEQUATE MANEUVERING ROOM. FOR THE WHEELCHAIR USER, A CLEAR AREA WITH A MINIMUM DIAMETER OF 5'- 0" MUST BE PROVIDED. ADDITIONALLY THE FOLLOWING FEATURES SHOULD BE CONSIDERED:

6.11 The kitchen should incorporate as many laborsaving devices as possible. Such devices might include a dishwasher, self-defrosting refrigerator, icemaker, garbage disposal and trash compactor. Appliances should be carefully selected for compatibility with the individual's needs.

6.12 Kitchens should provide generous storage space to minimize shopping trips. Knee space should be provided below the kitchen sink to allow the individual to work at the sink in the seated position. A "work area" counter with knee space should also be incorporated.

6.13 Kitchen cabinets should have adjustable shelving and "lazy susans" should be substituted for shelves at corner cabinets. Toe spaces (9" high and 6" deep) are often incorporated under kitchen cabinets. Such spaces permit the user closer approach and protect cabinet finishes. Some high cabinets are normally included even though they may be difficult for the user to reach.

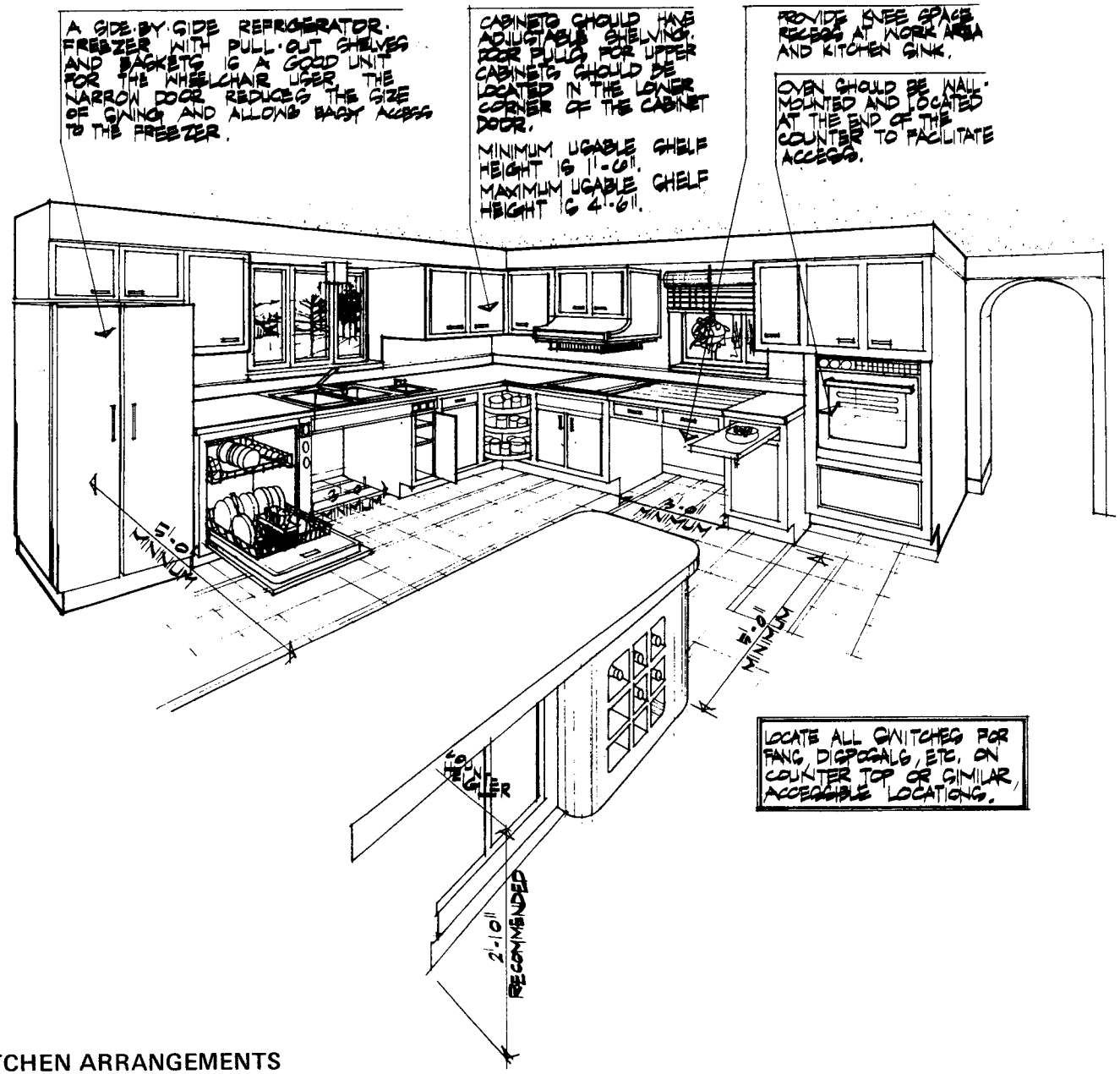

FIG. 6.11 KITCHEN ARRANGEMENTS

6.2 WORK AREAS

ADEQUATE COUNTER SPACE SHOULD BE PROVIDED IN ANY KITCHEN. THE STANDARD KITCHEN COUNTER HEIGHT IS 3'- 0" WHICH IS APPROXIMATELY 2" to 3" HIGHER THAN THE CONVENIENT HEIGHT FOR THE WHEELCHAIR USER. WHILE THE STANDARD COUNTER HEIGHT IS ACCEPTABLE (THOUGH NOT DESIRABLE), AT LEAST ONE SPECIFIC "WORK AREA" MUST BE PROVIDED TO ALLOW THE SEATED INDIVIDUAL A COMFORTABLE PLACE TO PREPARE FOOD. THIS WORK AREA MUST BE CONVENIENTLY LOCATED IN RELATION TO ALL KITCHEN APPLIANCES SUCH AS OVENS, REFRIGERATORS AND SINKS.

6.21 The "work area" countertop should be no higher than 2'- 10" and a recess must be provided below. This recess must have a minimum width of 3'- 0".

6.22 Two types of work area counters are illustrated. The first type (Fig. 6.22) provides a recess which is only high enough to accommodate the individual's legs and knees. Wheelchair armrests (unless they are removed) limit the user's access to the counter. The comfortable forward reach is approximately 1'- 9" (from the front of the counter) and therefore, any counter space deeper than 1'- 9" is unusable. In many instances, this solution is acceptable; however, the designer should be aware of the limitations. Such a workspace should have a minimum height of 2'- 3".

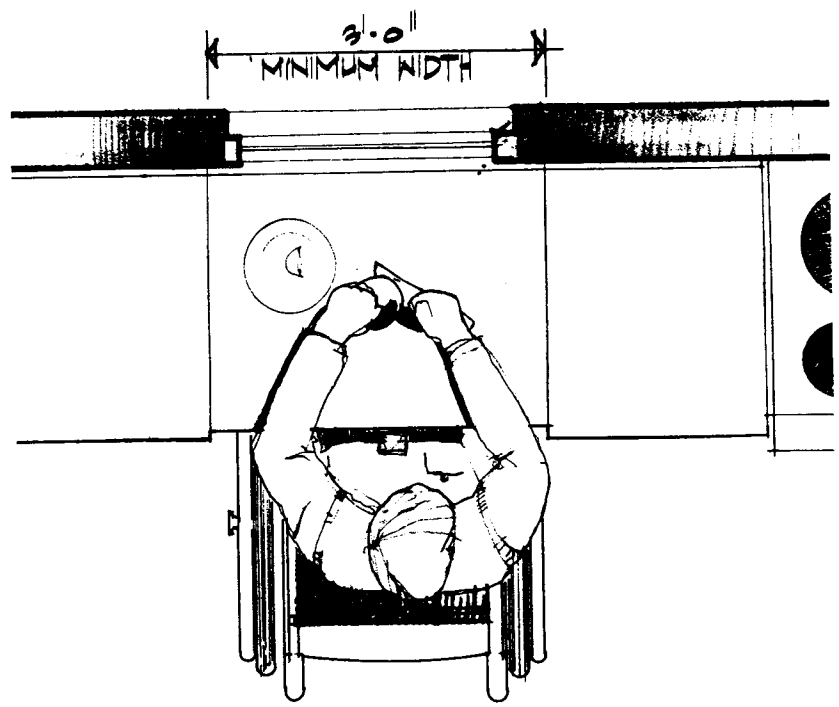

FIG. 6.21 KNEE RECESS WORK AREA

6.23 The second type of counter illustrated (Fig. 6.23) provides a recess which will allow the wheelchair user to approach the counter top more closely. To accommodate the wheelchair armrests, the recess should have a minimum height of 2'-6". Such a recess should have a minimum depth of 2'-0" to prevent the wheelchair footrests from limiting the individual's approach.

6.24 Pullout lapboards at a suitable height also provide convenient workspace.

6.25 The kitchen workspace is often a convenient location for a telephone extension.

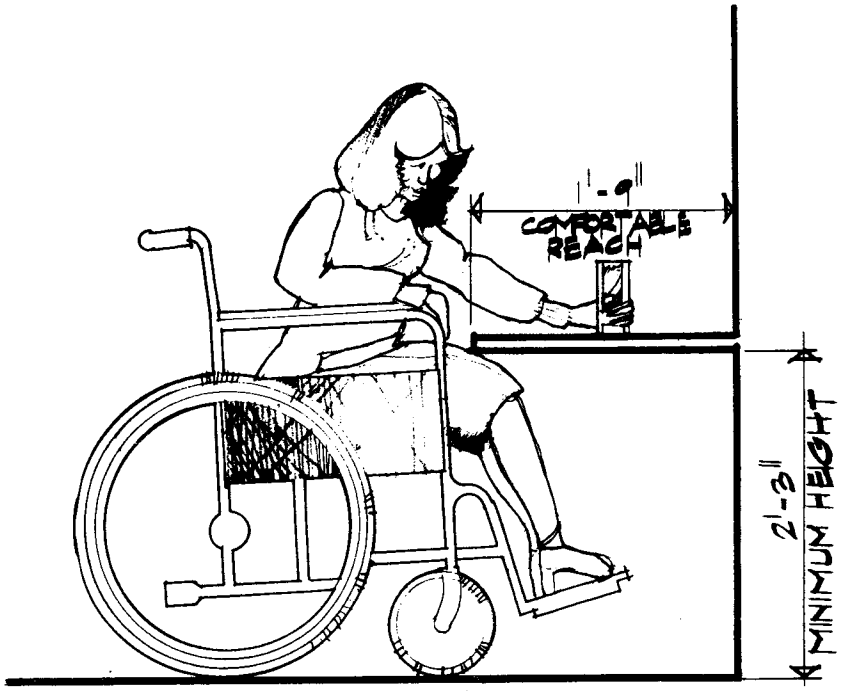

FIG. 6.22 KNEE SPACE CLEARANCE

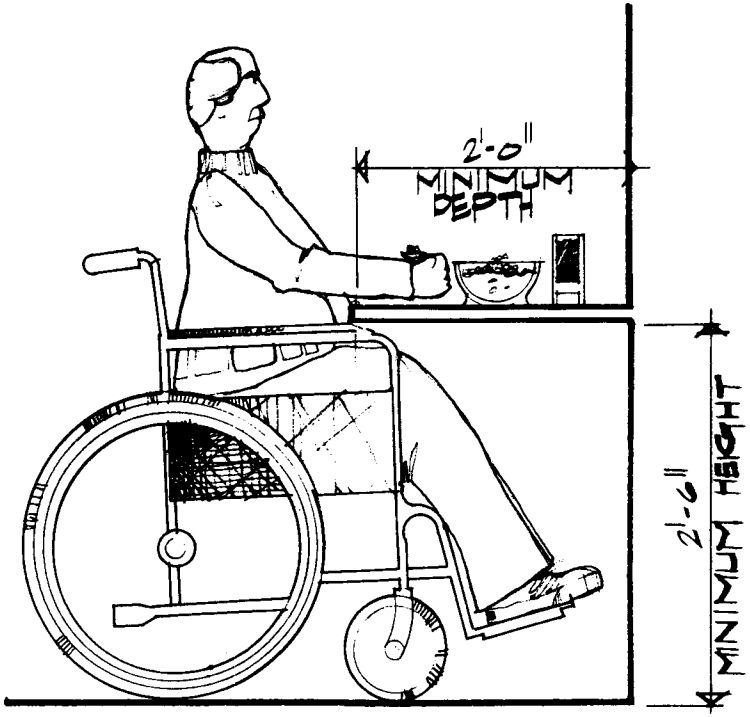

FIG. 6.23 ARMREST CLEARANCE

6.3 KITCHEN SINKS

THERE ARE THREE ESSENTIAL ELEMENTS TO THE DESIGN OF A KITCHEN SINK WHICH WILL ALLOW THE USER TO WORK IN THE SEATED POSITION. FIRST, THE SINK MUST BE AT A COMFORTABLE HEIGHT WITH ALL CONTROLS WITHIN EASY REACH. SECOND, THE SINK MUST HAVE A KNEE SPACE RECESS OF ADEQUATE HEIGHT AND WIDTH. THIRD, THE USER MUST BE PROTECTED FROM ALL SOURCES OF HEAT, INCLUDING THE SINK ITSELF.

6.31 The kitchen sink should be at a maximum height of 2'-10". Controls should be lever-type and located no further than 1'-9" from the edge of the counter.

6.32 Sinks should be no deeper than 5". A level counter area 2" to 3" in front of the sink should be provided for arm support.

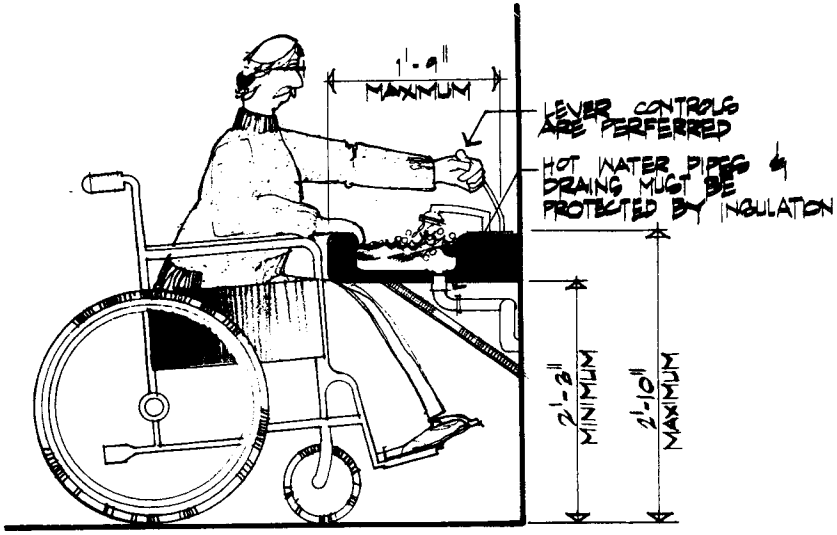

FIG. 6.31 SINK WITH KNEE SPACE

6.33 A pullout spray attachment is useful for rinsing dishes, filling pots, or cleaning the sink itself.

6.34 A knee recess must be provided below the kitchen sink with a minimum height of 2'-3" and a minimum width of 3'-0". The drain should be located in the back of the sink to allow the maximum possible knee space.

6.35 Insulation must be provided around any source of heat. Insulation should be provided for the sink and all supply and drain pipes, as well as dishwasher connections.

6.36 Disposals are a great convenience and should be provided whenever possible. The designer must take special care, however, that the disposal motor is enclosed in a manner that will protect the individual from shocks or burns. Disposal installation will normally limit the knee space below the sink. This can be minimized by locating the drain at the back of the sink and offset to one side. A more satisfactory solution is the installation of a separate disposal sink to one side of the knee recess. See Fig. 6.33.

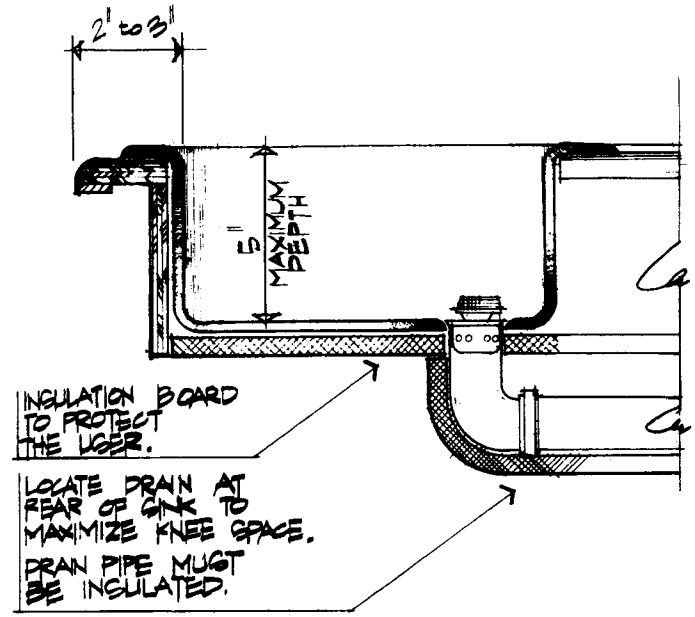

FIG. 6.32 SINK

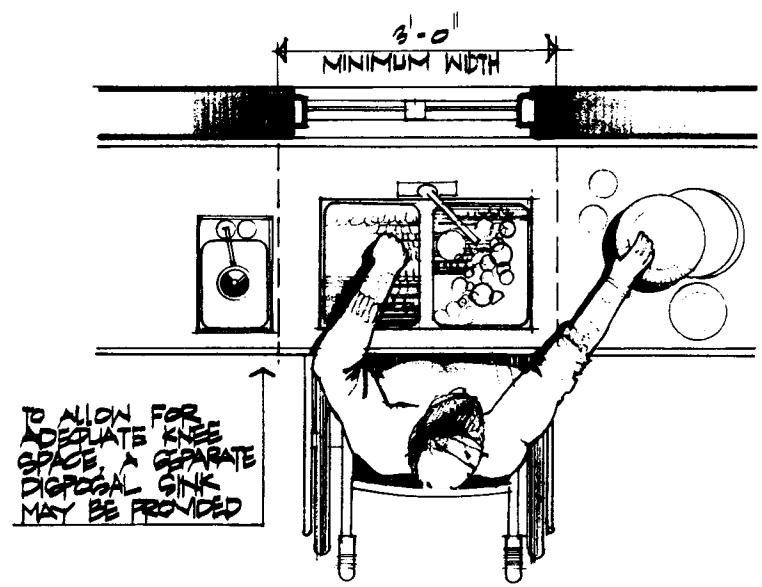

FIG. 6.33 DISPOSAL SINK

6.4 OVENS

THE CONVENTIONAL RANGE WITH THE BURNERS ON TOP AND THE OVEN BELOW IS DIFFICULT FOR MANY INDIVIDUALS AND UNACCEPTABLE FOR THE WHEELCHAIR USER. THE OVEN IN SUCH UNITS IS MOUNTED TOO LOW TO PERMIT THE WHEELCHAIR USER CONVENIENT ACCESS. TYPICALLY, SUCH UNITS PROVIDE BOTTOM-HUNG DOORS WHICH FURTHER RESTRICT ACCESS TO THE OVEN. THE RECOMMENDED ALTERNATIVE IS A WALL-MOUNTED OVEN AND A COUNTER-MOUNTED COOKTOP.

6.41 The cooktop should be mounted at a maximum height of 2'-10" to allow the seated individual to monitor food while it is cooking. Even at 2'-10", food on the back-burners may be difficult to see. The Canadian publication, *Housing the Handicapped,* suggests the installation of a mirror set above the cooktop mounted at an angle. The cleaning problem associated with such a mirror may, however, limit its convenience. The cooktop should have flush burners or a ceramic surface to reduce the possibility of spills. The cooktop should be flush with the adjoining counters.

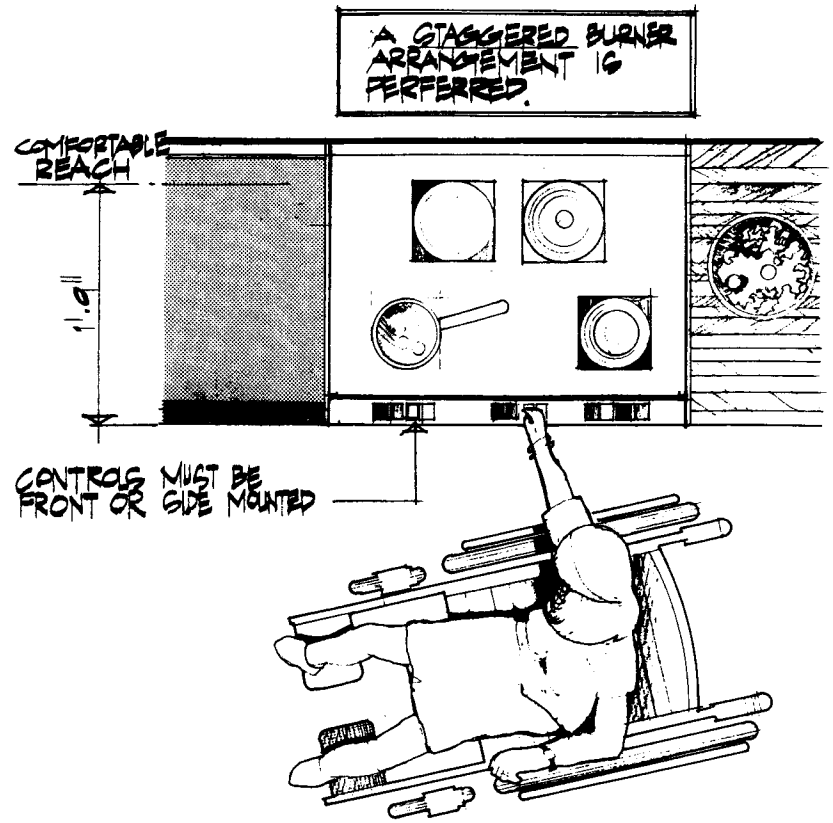

FIG. 6.41 COUNTER-MOUNTED COOKTOP

6.42 Cooktop controls must be front or side mounted. It is extremely dangerous for the seated individual to reach across the hot cooking surface to adjust the controls. The cooktop should have a staggered or offset burner arrangement. This will permit the use of back burners without reaching over the front burners. Cooktops should be as shallow as possible to minimize the reach to the back burners.

6.43 Cooktop exhaust fan and light switches must be easily accessible. Switches should be mounted on the counter if the stock controls mounted on the exhaust hood are more than 4'-0" above the floor.

6.44 Wall-mounted ovens should be located with the bottom of the oven approximately 2'-6" to 2'-10" above the floor. This height is convenient to the wheelchair user and normally allows knee space below the door. Side-hung oven doors permit closer approach to the oven. However, bottom-hung doors serve to protect the user from unexpected spills. In either instance, it is most convenient if the oven is located at the end of a counter to allow approach from the side. Counter space should be provided immediately adjacent to the oven.

6.45 Microwave ovens are a great convenience, but the designer must be aware of the danger posed to individuals with heart pacemakers.

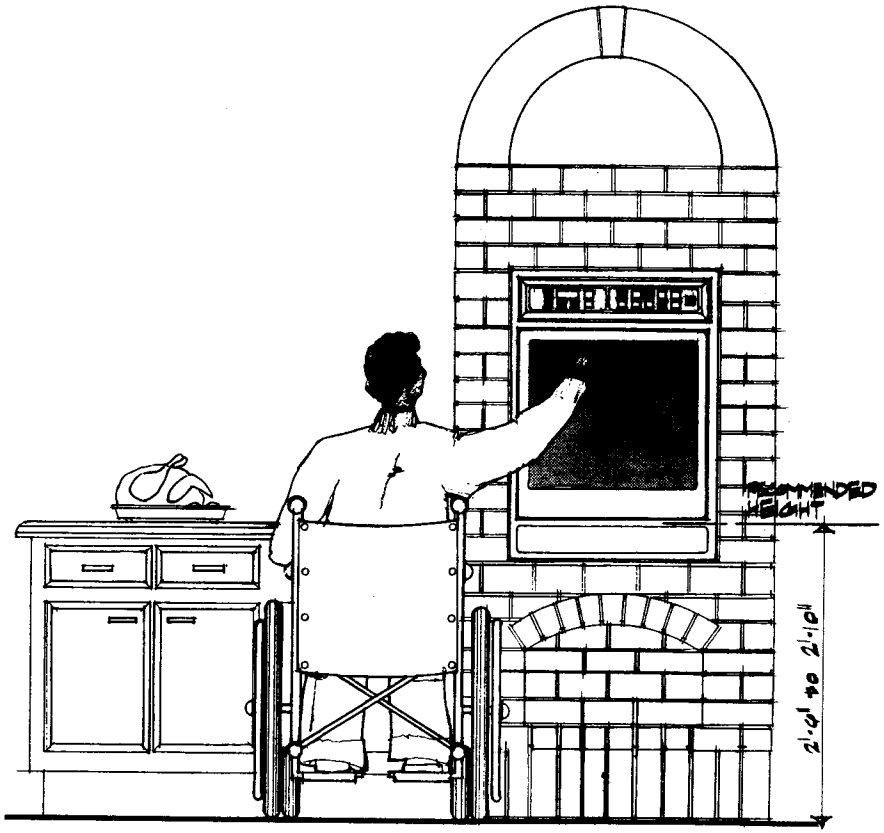

FIG. 6.42 WALL-MOUNTED OVEN

SAFETY CONSIDERATIONS

7.1 SAFETY CONSIDERATIONS

THE INDIVIDUAL WITH RESTRICTED MOBILITY IS UNIQUELY VULNERABLE TO THE DANGERS OF FIRE AND OTHER HAZARDS. IT IS THEREFORE NECESSARY FOR THE DESIGNER TO TAKE SPECIAL PRECAUTIONS TO INSURE THE INDIVIDUAL'S SAFETY.

7.11 Two remotely located means of exit must be provided from any residence.

7.12 Where ramps or stairs are integral to egress, such ramps or stairs must be of fire-retardant construction.

7.13 Smoke detectors (photoelectric or ionization type) must be installed in conjunction with a warning system. The warning system must be compatible with the individual's sensory capabilities (e.g., visual, audible, etc.).

7.14 An emergency warning signal should be considered. Such a system might alert neighbors or passersby to the existence of an emergency within the house. Telephone jack outlets or extensions should be installed in critical locations such as bedrooms and baths.

7.15 Fuse boxes or circuit breakers should be accessible to the wheelchair user.

7.16 Exposed hot water pipes, drain pipes, motors, and other sources of burns or abrasions, must be adequately housed or insulated.

7.17 The door to any confined space with a single means of egress should swing out. Inswinging doors pose a potential danger should the wheelchair user fall and block the door.

In view of the present accepted practice in this country for building technology, common U.S. units of measurement have been used throughout this publication. In recognition of the position of the United States as a signatory to the General Conference on Weights and Measure, which give official status to the metric S.I. system of units in 1960, appropriate conversion factors have been provided in the table below.

TABLE OF CONVERSION FACTORS TO METRIC (S.I.) UNITS

Physical Quantity	To convert from	to	multiply by
Length	inch	meter	2.54×10^{-2}
	foot	m	3.048×10^{-1}
Area	$inch^2$	m^2	6.4516×10^{-4}
	$foot^2$	m^2	9.290×10^{-2}
Volume	$inch^3$	m^3	1.639×10^{-5}
	$foot^3$	m^3	2.832×10^{-2}
Temperature	Fahrenheit	Celsius	$t_c = ({}^tF-32)/1.8$
Temperature difference	Fahrenheit	Kelvin	$K = (\triangle{}^tF)/1.8$
Pressure	inch Hg (60F)	$newton/m^2$	3.377×10^3
Mass	lbm	kg	4.536×10^{-1}
Mass/unit area	lbm/ft^2	kg/m^2	4.882
Moisture content rate	lbm/ft^2 week	kg/m^2s	8.073×10^{-6}
Density	lbm/ft^3	kg/m^3	1.602×10^1
Thermal conductivity	Btu/hr ft^2 (F/inch)	$\frac{W}{mK}$	1.442×10^{-1}
U-value	Btu/hr ft^2 F	$\frac{W}{m^2K}$	5.678
Thermal resistance	F/(Btu/hr ft^2)	$K/(W/m^2)$	1.761×10^{-1}
Heat flow	Btu/hr ft^2	W/m^2	3.155

INDEX

ANTHROPOMETRICS 12, 13

BATHROOMS
- arrangements 29, 31, 48, 49
- grab bars 48-50, 54-59
- hot water pipes 51, 53, 66, 67, 73
- mirrors 51, 53
- shelves 49, 51
- showers 48, 57-59
- toilets 48-50, 54, 55
- transfer 48, 54-56, 58, 59
- tubs 49, 56, 57
- vanity 52

BEDROOMS 29-31

CARPETS 28, 31

CARPORTS 24

CEILING SUPPORTS
- baths 48, 56
- garage 25

CIRCULATION 28, 42

CLOSETS 30, 43

COOKTOPS 68, 69

CORRIDORS 42

COUNTERS 62-65, 68, 69

DISHWASHERS 62, 63, 67

DISPOSALS 62, 67

DOOR BELLS 23

DOORS
- accordion doors 43
- closet doors 43
- dimensions 34
- entry doors 22, 23
- hardware 36, 37
- kickplates 37
- operation 34, 35
- shower doors 59
- sliding doors 36, 43
- swing 42, 73

ELECTRICAL OUTLETS 41, 51, 53

EMERGENCY CALL 73

EXITS 30, 31, 73

FLOOR PLANS 29, 31

FREEZERS 63

FINISHES 28

GARAGES 16, 24, 25, 29

GRAB BARS
- toilets 50, 54, 55
- tubs 49, 56, 57
- showers 57-59

HALLS 42

HANDRAILS
- platforms 20
- ramps 18-21
- stairs 21
- walks 19

INCLINED ELEVATORS **44**

INSULATION
- for pipes 51, 52, 66, 67, 73
- walls & windows 22, 28, 38

KITCHENS
- arrangements 62, 63
- cabinets 62, 63
- counters 62-65, 68, 69
- refrigerators 62, 63
- sinks 62, 63, 66, 67
- work areas 62-65

LAPBOARDS **63, 65**

LAUNDRY
- washers & dryers 31

LAVATORY **48-51, 52**

LIGHT SWITCHES **24, 25, 40**

MIRRORS **51, 53**

METRIC CONVERSIONS **75**

MULTI STORY HOMES **28, 44**

OVENS **68, 69**

PLATFORMS
- at entrance 17, 22, 23
- at ramps 19
- at tubs 56

PARKING **16, 24**

PATIOS **16, 29**

RAMPS **18-21**
- dimensions 18, 19
- fire-retardant 73
- handrails 18, 20, 21
- slope 18, 19
- surface 19

REFRIGERATORS **62, 63**

SHELVES
- bathroom 49, 51
- closets 43
- kitchens 62, 63

SIDELIGHTS **22, 23**

SINKS **62, 63, 66, 67**

SWITCHES **40**

SHOWERS **57-59**

STAIRS
- handrails 20, 21
- inclined elevators 44
- risers 19
- wheelchair lifts 44, 45

TELEPHONES
locations 49, 65, 73
wall-mounted 41

THRESHOLDS 23, 36, 43

TRANSFER
to bed 30
to car 24, 25
to toilet 48, 50, 54, 55
to tub 48, 56, 57
to shower 48, 56-59

TURNING SPACE 10, 11, 48, 49

VANITY 53

WALKS 16-19

WALL PROTECTION 42

WEATHERSTRIPPING 23

WHEELCHAIR LIFTS 44, 45

WHEELCHAIRS
dimensions 10-13
turning radius 10

WORK AREAS 62, 63, 64, 65

WINDOWS 38

ZONE CONTROL HEATING 28

INDEX

HANDBOOK FOR DESIGN:

SPECIALLY ADAPTED HOUSING